Chipsmall Limited consists of a professional team with an average of over 10 year of expertise in the distribution of electronic components. Based in Hongkong, we have already established firm and mutual-benefit business relationships with customers from,Europe,America and south Asia,supplying obsolete and hard-to-find components to meet their specific needs.

With the principle of “Quality Parts,Customers Priority,Honest Operation,and Considerate Service”,our business mainly focus on the distribution of electronic components. Line cards we deal with include Microchip,ALPS,ROHM,Xilinx,Pulse,ON,Everlight and Freescale. Main products comprise IC,Modules,Potentiometer,IC Socket,Relay,Connector.Our parts cover such applications as commercial,industrial, and automotives areas.

We are looking forward to setting up business relationship with you and hope to provide you with the best service and solution. Let us make a better world for our industry!

Contact us

Tel: +86-755-8981 8866 Fax: +86-755-8427 6832
Email & Skype: info@chipsmall.com Web: www.chipsmall.com
Address: A1208, Overseas Decoration Building, #122 Zhenhua RD., Futian, Shenzhen, China

Hexagon Application Kit

For XMC4000 Family

COM_ETH-V1

Ethernet/CAN/RS485 Interface Card

Board User's Manual

Revision 1.0, 2012-02-28

Microcontroller

Edition 2012-02-28

Published by
Infineon Technologies AG
81726 Munich, Germany

© 2012 Infineon Technologies AG
All Rights Reserved.

Legal Disclaimer

The information given in this document shall in no event be regarded as a guarantee of conditions or characteristics. With respect to any examples or hints given herein, any typical values stated herein and/or any information regarding the application of the device, Infineon Technologies hereby disclaims any and all warranties and liabilities of any kind, including without limitation, warranties of non-infringement of intellectual property rights of any third party.

Information

For further information on technology, delivery terms and conditions and prices, please contact the nearest Infineon Technologies Office (**www.infineon.com**).

Warnings

Due to technical requirements, components may contain dangerous substances. For information on the types in question, please contact the nearest Infineon Technologies Office.

Infineon Technologies components may be used in life-support devices or systems only with the express written approval of Infineon Technologies, if a failure of such components can reasonably be expected to cause the failure of that life-support device or system or to affect the safety or effectiveness of that device or system. Life support devices or systems are intended to be implanted in the human body or to support and/or maintain and sustain and/or protect human life. If they fail, it is reasonable to assume that the health of the user or other persons may be endangered.

Revision History	
Page or Item	**Subjects (major changes since previous revision)**
Revision 1.0, 2012-02-28	**Initial release**

Trademarks of Infineon Technologies AG

AURIX™, C166™, CanPAK™, CIPOS™, CIPURSE™, EconoPACK™, CoolMOS™, CoolSET™, CORECONTROL™, CROSSAVE™, DAVE™, EasyPIM™, EconoBRIDGE™, EconoDUAL™, EconoPIM™, EiceDRIVER™, eupec™, FCOS™, HITFET™, HybridPACK™, I²RF™, ISOFACE™, IsoPACK™, MIPAQ™, ModSTACK™, my-d™, NovalithIC™, OptiMOS™, ORIGA™, PRIMARION™, PrimePACK™, PrimeSTACK™, PRO-SIL™, PROFET™, RASIC™, ReverSave™, SatRIC™, SIEGET™, SINDRION™, SIPMOS™, SmartLEWIS™, SOLID FLASH™, TEMPFET™, thinQ!™, TRENCHSTOP™, TriCore™.

Other Trademarks

Advance Design System™ (ADS) of Agilent Technologies, AMBA™, ARM™, MULTI-ICE™, KEIL™, PRIMECELL™, REALVIEW™, THUMB™, µVision™ of ARM Limited, UK. AUTOSAR™ is licensed by AUTOSAR development partnership. Bluetooth™ of Bluetooth SIG Inc. CAT-iq™ of DECT Forum. COLOSSUS™, FirstGPS™ of Trimble Navigation Ltd. EMV™ of EMVCo, LLC (Visa Holdings Inc.). EPCOS™ of Epcos AG. FLEXGO™ of Microsoft Corporation. FlexRay™ is licensed by FlexRay Consortium. HYPERTERMINAL™ of Hilgraeve Incorporated. IEC™ of Commission Electrotechnique Internationale. IrDA™ of Infrared Data Association Corporation. ISO™ of INTERNATIONAL ORGANIZATION FOR STANDARDIZATION. MATLAB™ of MathWorks, Inc. MAXIM™ of Maxim Integrated Products, Inc. MICROTEC™, NUCLEUS™ of Mentor Graphics Corporation. Mifare™ of NXP. MIPI™ of MIPI Alliance, Inc. MIPS™ of MIPS Technologies, Inc., USA. muRata™ of MURATA MANUFACTURING CO., MICROWAVE OFFICE™ (MWO) of Applied Wave Research Inc., OmniVision™ of OmniVision Technologies, Inc. Openwave™ Openwave Systems Inc. RED HAT™ Red Hat, Inc. RFMD™ RF Micro Devices, Inc. SIRIUS™ of Sirius Satellite Radio Inc. SOLARIS™ of Sun Microsystems, Inc. SPANSION™ of Spansion LLC Ltd. Symbian™ of Symbian Software Limited. TAIYO YUDEN™ of Taiyo Yuden Co. TEAKLITE™ of CEVA, Inc. TEKTRONIX™ of Tektronix Inc. TOKO™ of TOKO KABUSHIKI KAISHA TA. UNIX™ of X/Open Company Limited. VERILOG™, PALLADIUM™ of Cadence Design Systems, Inc. VLYNQ™ of Texas Instruments Incorporated. VXWORKS™, WIND RIVER™ of WIND RIVER SYSTEMS, INC. ZETEX™ of Diodes Zetex Limited.

Last Trademarks Update 2011-02-24

Table of Contents

1 Overview 7
1.1 Key Features 7
1.2 Block Diagram 8

2 Hardware Description 9
2.1 Ethernet 9
2.2 CAN 11
2.3 RS485/CAN Boot Loader 12
2.4 IO Expander 13
2.5 Power 13
2.6 Satellite Connector 15

3 Production Data 16
3.1 Schematics 16
3.2 Layout and Geometry 19
3.3 Bill of Material 20

List of Figures

Figure 1 Block Diagram of the Ethernet/CAN/RS485 Interface Card 8
Figure 2 Ethernet/CAN/RS485 Interfaces Card (COM_ETH-V1)....9
Figure 3 Ethernet Interface....9
Figure 4 CAN Interface....11
Figure 5 RS485/CAN BootLoader 12
Figure 6 Power Cirucit 14
Figure 7 Power LED's....14
Figure 8 COM Satellite Connector 15
Figure 9 Satellite Connector Type COM 15
Figure 10 Satellite Connector, I2C-GPIO, Power....17
Figure 11 Ethernet, CAN, RS485 18
Figure 12 Ethernet/CAN/RS485 Interfaces Card Layout 19

List of Tables

Table 1 RJ45 Connector Pinout 10
Table 2 Ethernet signal connection to the Satellite Connector 10
Table 3 CAN Connector Pinout (X320) 11
Table 4 CAN signal connection to the Satellite Connector 11
Table 5 RS485 Connector Pinout (X331) 12
Table 6 CAN Connector Pinout (X330) 12
Table 7 RS485/CAN signal connection to the Satellite Connector 13
Table 8 GPIO channel LED/SMD pad mapping 13
Table 9 IO Expander I2C signal connection to the Satellite Connector 13
Table 10 Power LED's 14
Table 11 PowerScale Jumper 14
Table 12 Power connection to the Satellite Connector 15
Table 13 Ethernet/CAN/RS485 Interfaces Card BOM 20

Introduction

This document describes the features and hardware details of the Ethernet/CAN/RS485 Interface Card (COM_ETH-V1) designed to work with Infineon's XMC4500 CPU board. This board is part of Infineon's Hexagon Application Kits.

1 Overview

The COM_ETH-V1 board is an application expansion satellite card of the Hexagon Application Kits. The satellite card along with a CPU board (e.g. CPU_45A-V2 board) demonstrates the communication capabilities of XMC4500. The main use case for this satellite card is to demonstrate the communication features of XMC4500 device including the toolchain. The focus is safe operation under evaluation conditions. The satellite card is not cost optimized and cannot be seen as reference design.

1.1 Key Features

The COM_ETH-V1 satellite card is equipped with following features

- Connection to CPU board (e.g. CPU_45A-V2) via satellite connector COM
- 10/100Mbps Ethernet (RJ45)
- CAN transceiver with CAN connector (DE-9 male)
- RS-485 transceiver, full-duplex, bootable (DE-9 female)
- CAN transceiver, bootable (4-pin header)
- I2C based IO expander with 8 channels
- Power supply
    - Powerjack for external 24 V supply
    - From CPU board via COM satellite connector

1.2 Block Diagram

Figure 1 shows the block diagram of the COM_ETH-V1 satellite card. There are following building blocks:

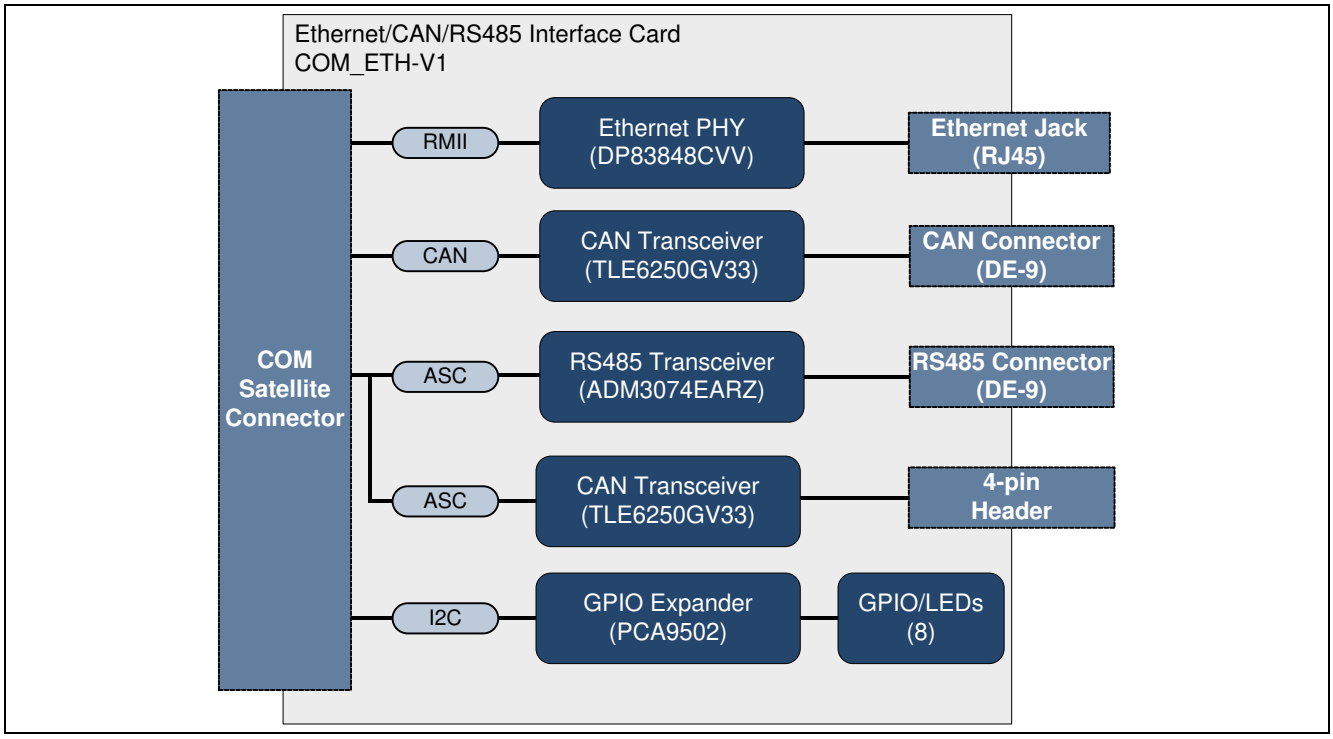

Figure 1 Block Diagram of the Ethernet/CAN/RS485 Interface Card

2 Hardware Description

The following sections give a detailed description of the hardware and how it can be used.

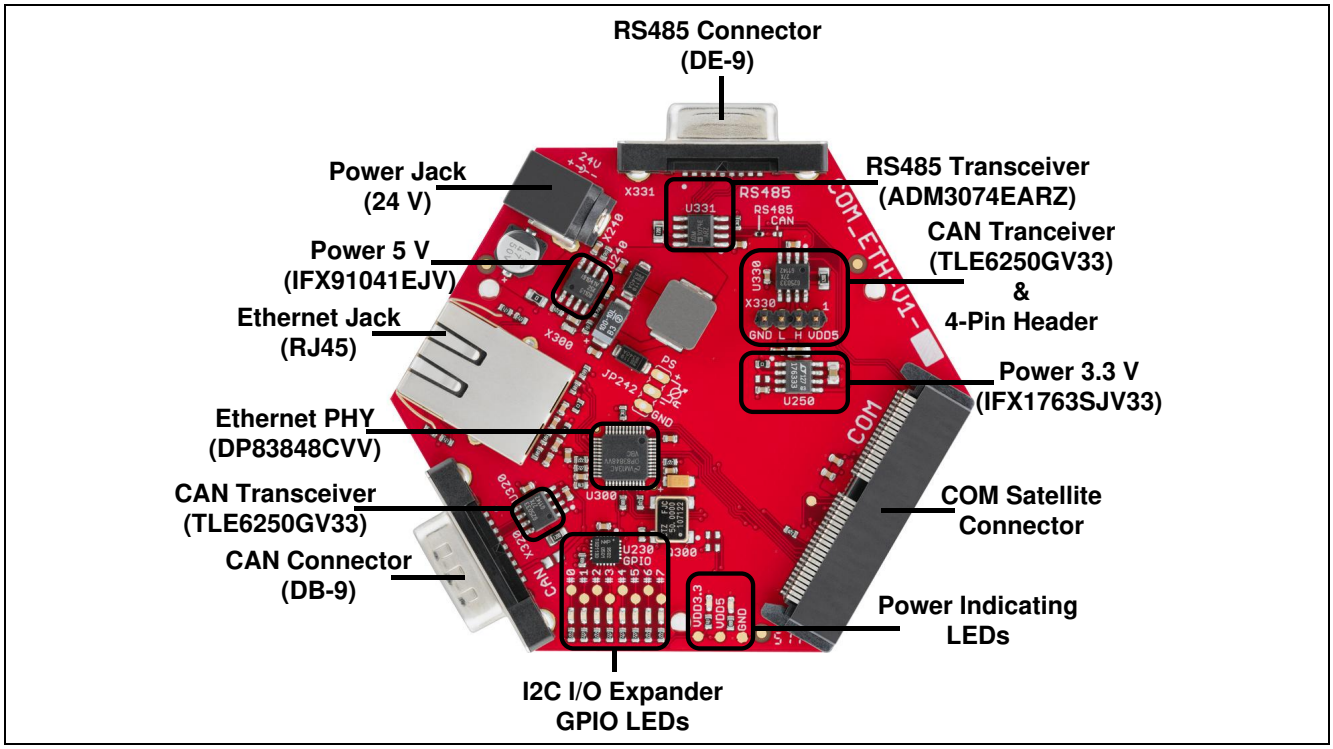

Figure 2 Ethernet/CAN/RS485 Interfaces Card (COM_ETH-V1)

2.1 Ethernet

The COM_ETH-V1 satellite card supports RJ45 jack with magnetic on board for communication to LAN. On board PHY device DP83848CVV is connected to the CPU via a RMII.

A 50 MHz crystal oscillator is used on board to generate the clock required by the RMII interface.

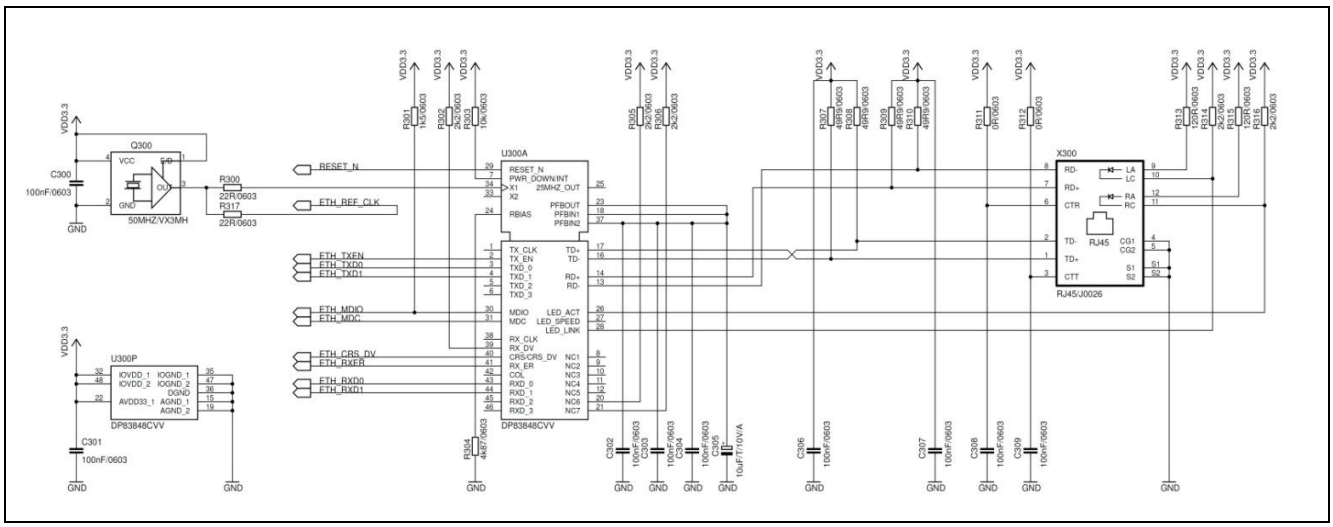

Figure 3 Ethernet Interface

Table 1 below gives the signal details of RJ45 connector.

Table 1 RJ45 Connector Pinout

Pin No.	Signal Name	Description
1	TD+	Tranmit Data Plus
2	TD-	Tranmit Data Minus
3	RD+	Receive Data Plus
4	NC	No Connection
5	NC	No Connection
6	RD-	Receive Data Minus
7	NC	No Connection
8	NC	No Connection

Table 2 shows the connection of the Ethernet signals to the COM satellite connector.

Table 2 Ethernet signal connection to the Satellite Connector

Pin No.	Signal Name	Description
22	ETH_REF_CLK	Clock
21	ETH_TXD0	Tansmit Data 0
14	ETH_TXD1	Tansmit Data 1
16	ETH_TXEN	Tansmit Enable
15	ETH_RXD0	Receive Data 0
13	ETH_RXD1	Receive Data 1
18	ETH_CRS_DV	Receive Data Valid
20	ETH_RXER	Receive Error
19	ETH_MDC	Management Clock
17	ETH_MDIO	Management Data

2.2 CAN

The COM_ETH-V1 satellite card supports a CAN interface on board via a DE-9 connector (X320). A CAN transciever (U320) is connected to the CPU via the 80-pin satellite connector.

The CAN bus on board has a 120 Ohm termination resistor.

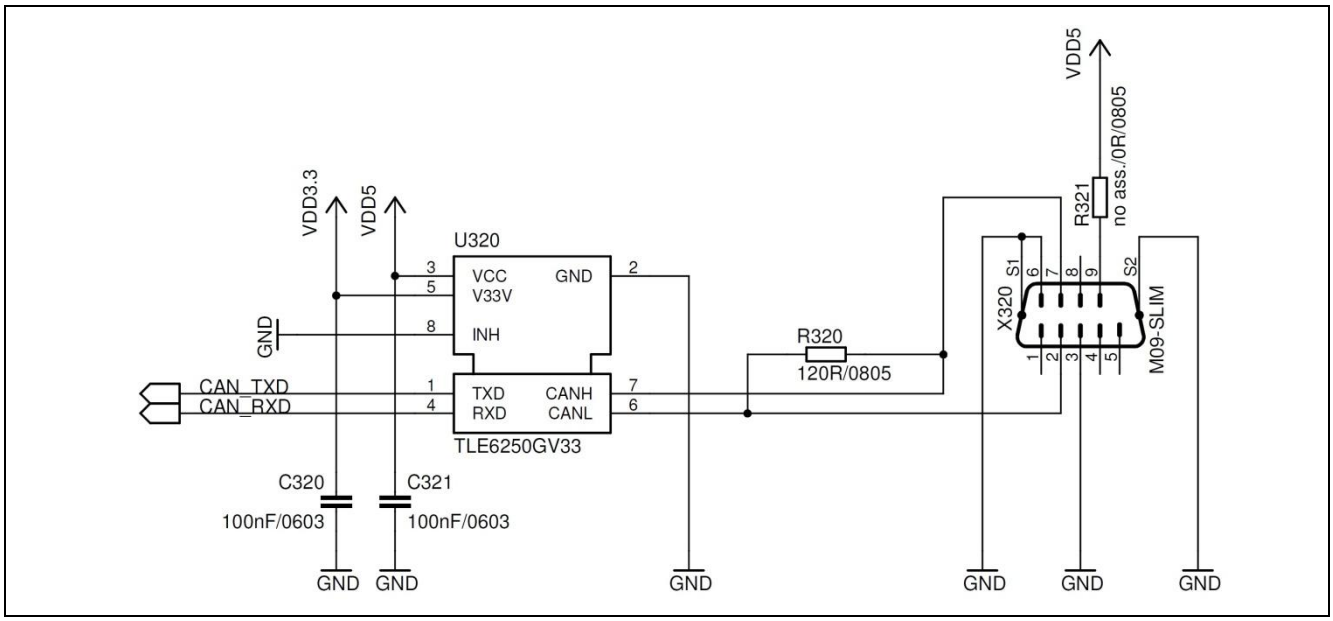

Figure 4 CAN Interface

Table 3 gives the details of CAN connector pin mapping.

Table 3 CAN Connector Pinout (X320)

Pin No.	Signal Name	Description
1	NC	No Connection
2	CANL	CAN Low
3	GND	Ground
4	NC	No Connection
5	NC	No Connection
6	GND	Ground
7	CANH	CAN High
8	NC	No Connection
9	VDD	5 V

Table 4 shows the connection of the CAN signals to the COM satellite connector.

Table 4 CAN signal connection to the Satellite Connector

Pin No.	Signal Name	Description
28	CAN_TXD	CAN Transmit Data
30	CAN_RXD	CAN Receive Data

2.3 RS485/CAN Boot Loader

The COM_ETH-V1 satellite card supports RS485 interface via a DE-9 connector (X331). The satellite card uses a RS485 transciever (U331) connected to the CPU via the 80-pin satellite connector.

Table 5 gives the details of RS485 connector pin mapping.

Table 5 RS485 Connector Pinout (X331)

Pin No.	Signal Name	Description
1	NC	No Connection
2	TX+	Transmit Data Plus
3	GND	Ground
4	RX+	Receive Data Plus
5	NC	No Connection
6	NC	No Connection
7	TX-	Transmit Data Minus
8	RX-	Receive Data Minus
9	NC	No Connection

The COM satellite card supports booting of the CPU via RS485 (default) or CAN. Boot option can be chosen using the solder jumpers SJ1/SJ2. SJ2 (RS485) is closed by default. For booting through CAN use connector X330, for booting through RS485 use connector X331.

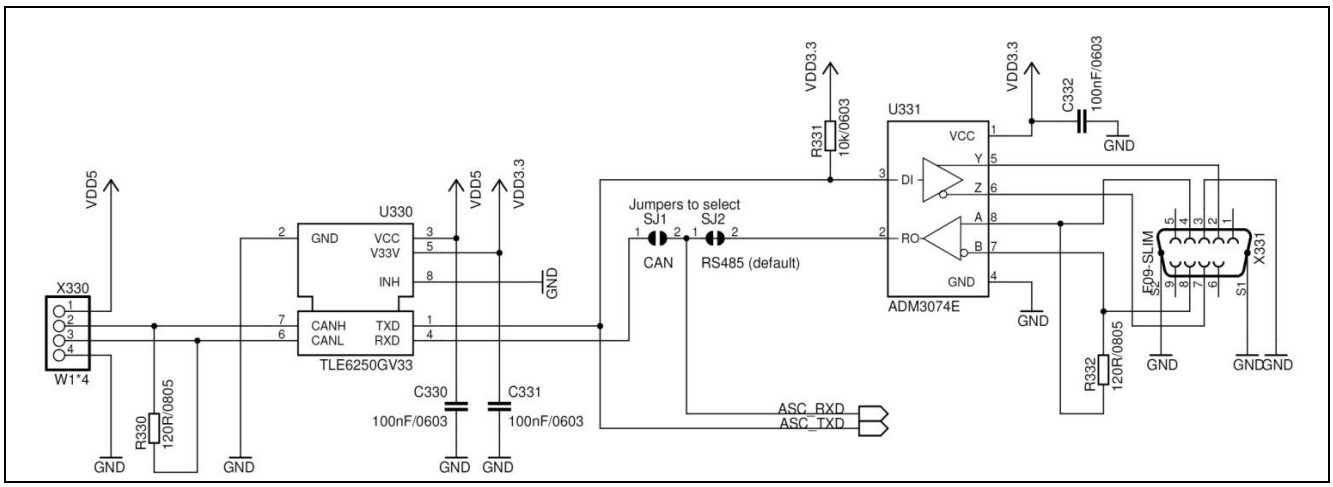

Figure 5 RS485/CAN BootLoader

Table 6 CAN Connector Pinout (X330)

Pin No.	Signal Name	Description
1	VDD	5 V
2	CANH	CAN High
3	CANL	CAN Low
4	GND	Ground

Both RS485 as well as CAN bus have a 120 Ohm termination resistor.

Table 7 shows the connection of the RS485/CAN signals to the COM satellite connector.

Table 7 RS485/CAN signal connection to the Satellite Connector

Pin No.	Signal Name	Description
29	ASC_TXD	ASC Transmit Data
27	ASC RXD	ASC Receive Data

2.4 IO Expander

The COM_ETH-V1 satellite card supports GPIO expansion though I2C IO-Expander on board (U230). The I2C address for the IO expander device is 0x1001100X. The satellite card supports 8 such GPIO's. All the GPIO's are connected to LEDs (V230-V237) and SMD-Pads (TP230 – TP237). The table below gives the GPIO channel and corresponding LED/PAD mapping.

Table 8 GPIO channel LED/SMD pad mapping

GPIO	LED reference	SMD pad Reference
GPIO0	V230	TP230
GPIO1	V231	TP231
GPIO2	V232	TP232
GPIO3	V233	TP233
GPIO4	V234	TP234
GPIO5	V235	TP235
GPIO6	V236	TP236
GPIO7	V237	TP237

Table 9 shows the connection of the IO Expander device to the COM satellite connector.

Table 9 IO Expander I2C signal connection to the Satellite Connector

Pin No.	Signal Name	Description
38	I2C_SCL	I2C Clock
37	I2C_SDA	I2C Data

2.5 Power

The COM_ETH-V1 satellite card can be supplied by an external power supply (24 V / 1 A) to be connected to the power jack X240 or by a 5 V supply via the 80-pin COM satellite connector. An external power supply is necessary only in case the current coming via the COM satellite connector is not sufficient.

A DC-DC converter on board (U240) steps down the input voltage from the power jack X240 to 5 V (VDD5). The input voltage can be in the range from 12 V to 24 V. An on board linear voltage regulator is generating a 3.3 V (VDD3.3) power supply out of the VDD5.

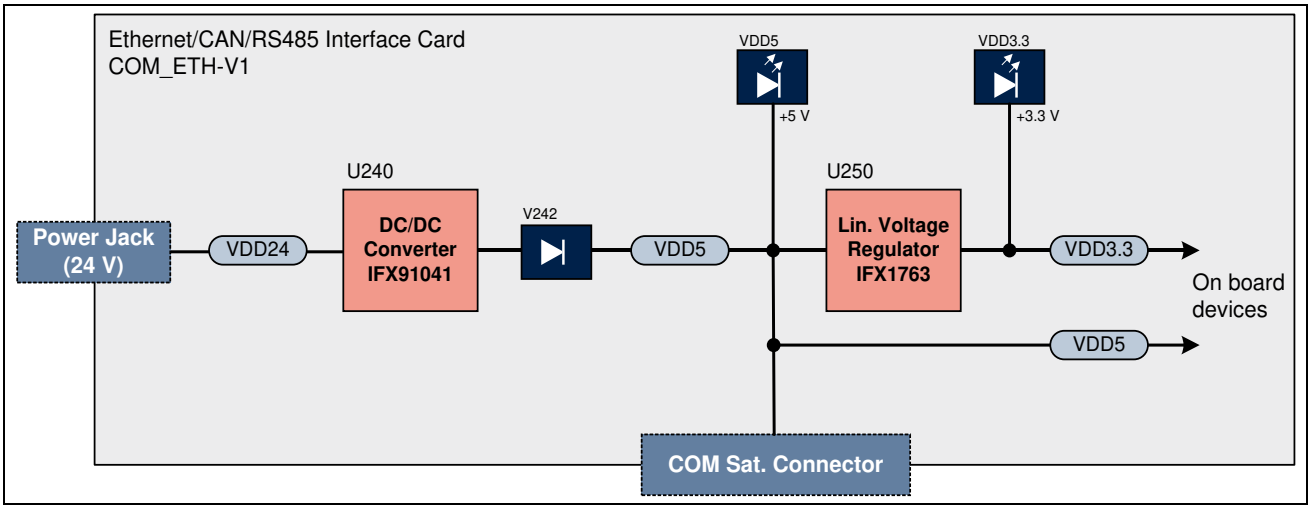

Figure 6 Power Cirucit

A Diode V242 protects the reverse flow of current to an external source. Therefore a simultaneous power supply of the satellite boards via both the power jack and the satellite connector with not harm.

LED V210 indicates the presence of 5 V power and LED V211 indicates the presence of 3.3 V power.

Table 10 Power LED's

LED	Power Rail	Voltage	Note
V210	VDD5	5 V	Must always be "ON"
V211	VDD3.3	3.3 V	Must always be "ON"

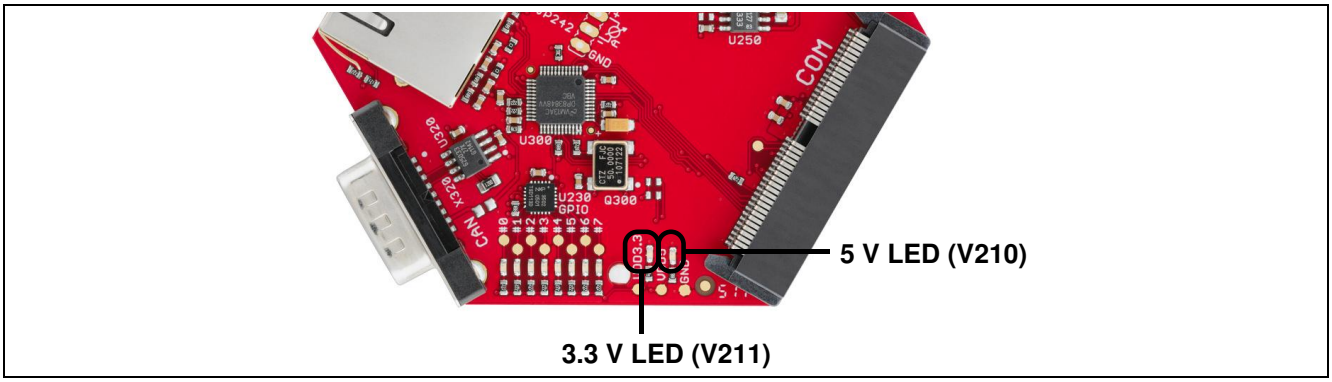

Figure 7 Power LED's

The COM_ETH-V1 satellite card supports a PowerScale probe for power measurement purpose.

Table 11 PowerScale Jumper

Jumper	Function	Description
JP242	PowerScale	At this point a Hitex PowerScale probe can be connected for current sensing VDD (complete power delivered by U240) Default: pos. 1-2 (closed) *Note: On the PCB bottom side there will be a shorting trace between pin 1-2. This trace has to be cut first, before using PowerScale*

Table 12 shows the power connection to to the COM satellite connector.

Table 12 Power connection to the Satellite Connector

Pin No.	Signal Name	Description
43,44,45,46	VDD5	5 V
1,2,24,61,79,80	GND	Ground

2.6 Satellite Connector

The satellite connector of the COM_ETH-V1 satellite card interfaces it's the signals to a CPU board e.g. CPU_45A-V2. Take care to connect the COM satellite card always to the corresponding COM satellite connector of the CPU board only.

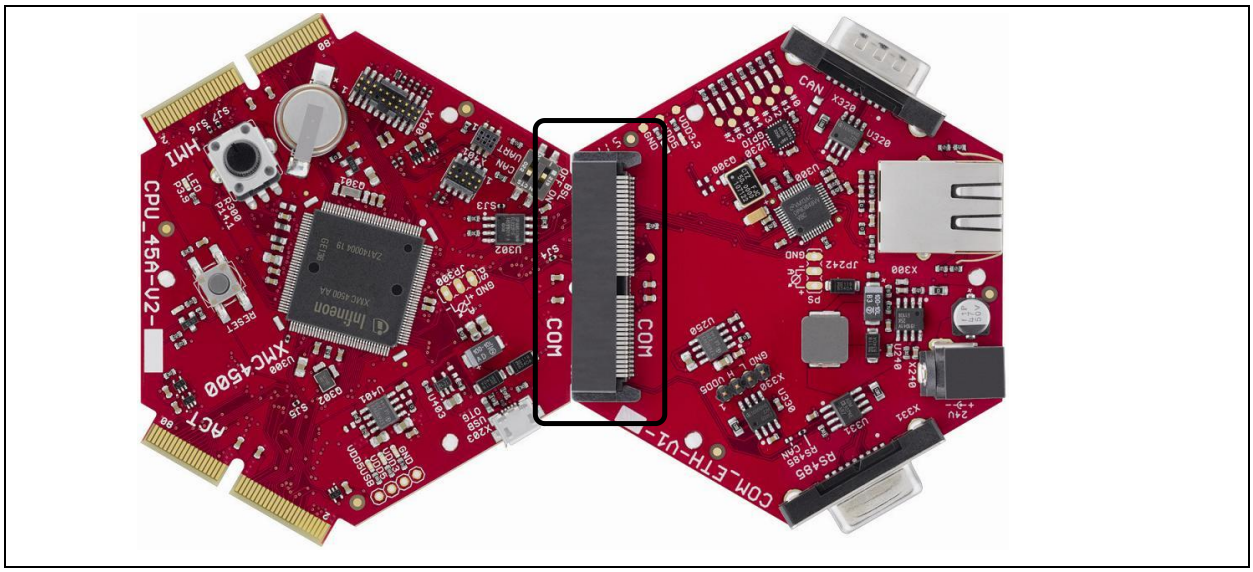

Figure 8 COM Satellite Connector

The signal mapping details of the COM satellite connector and the correponding CPU function are provided in Figure 9

| | | |

3 Production Data

3.1 Schematics

This chapter contains the schematics for the Ethernet/CAN/RS485 Interface Card:

- Satellite Connector, IO Expander, Power
- Ethernet, CAN, RS485

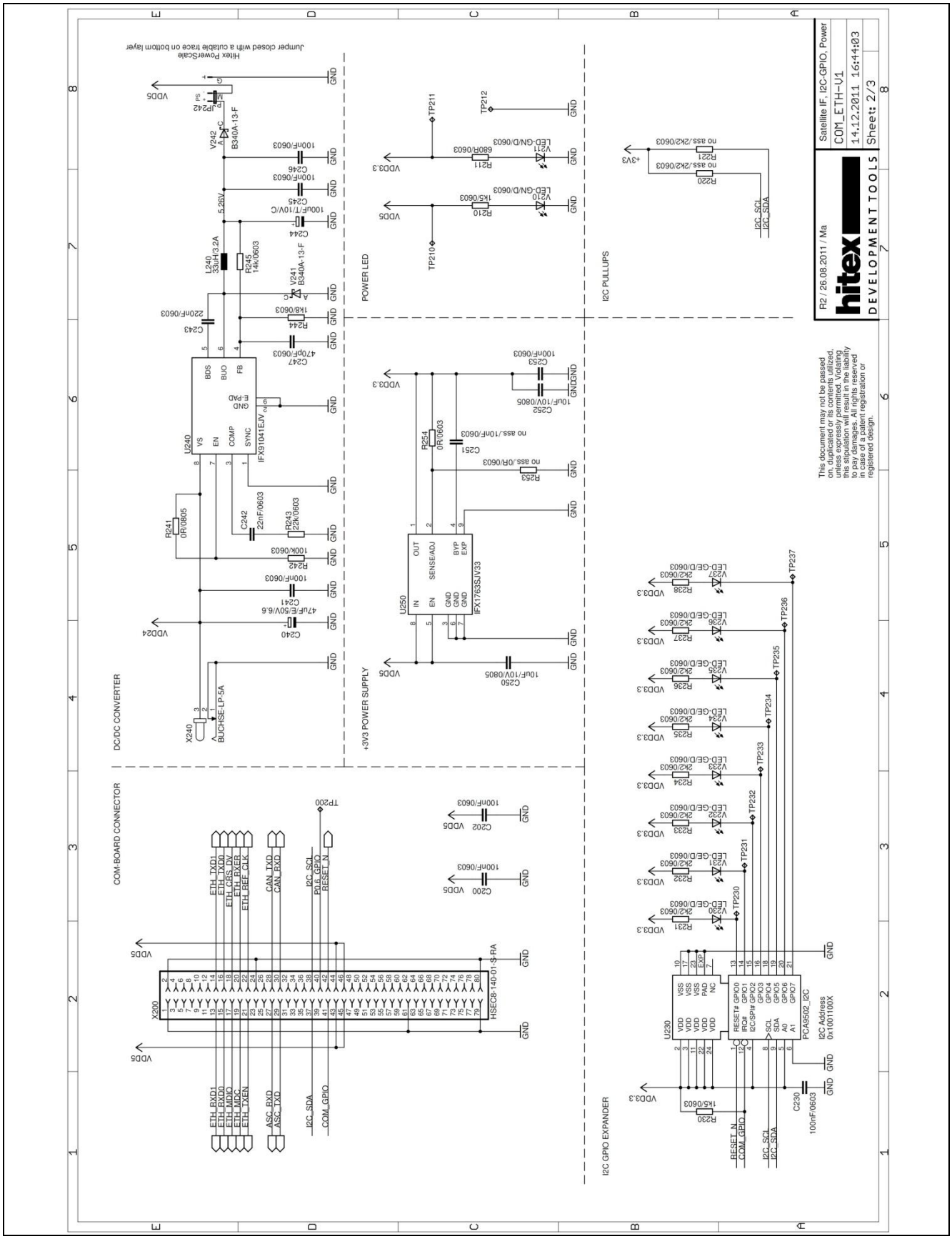

Figure 10 Satellite Connector, I2C-GPIO, Power

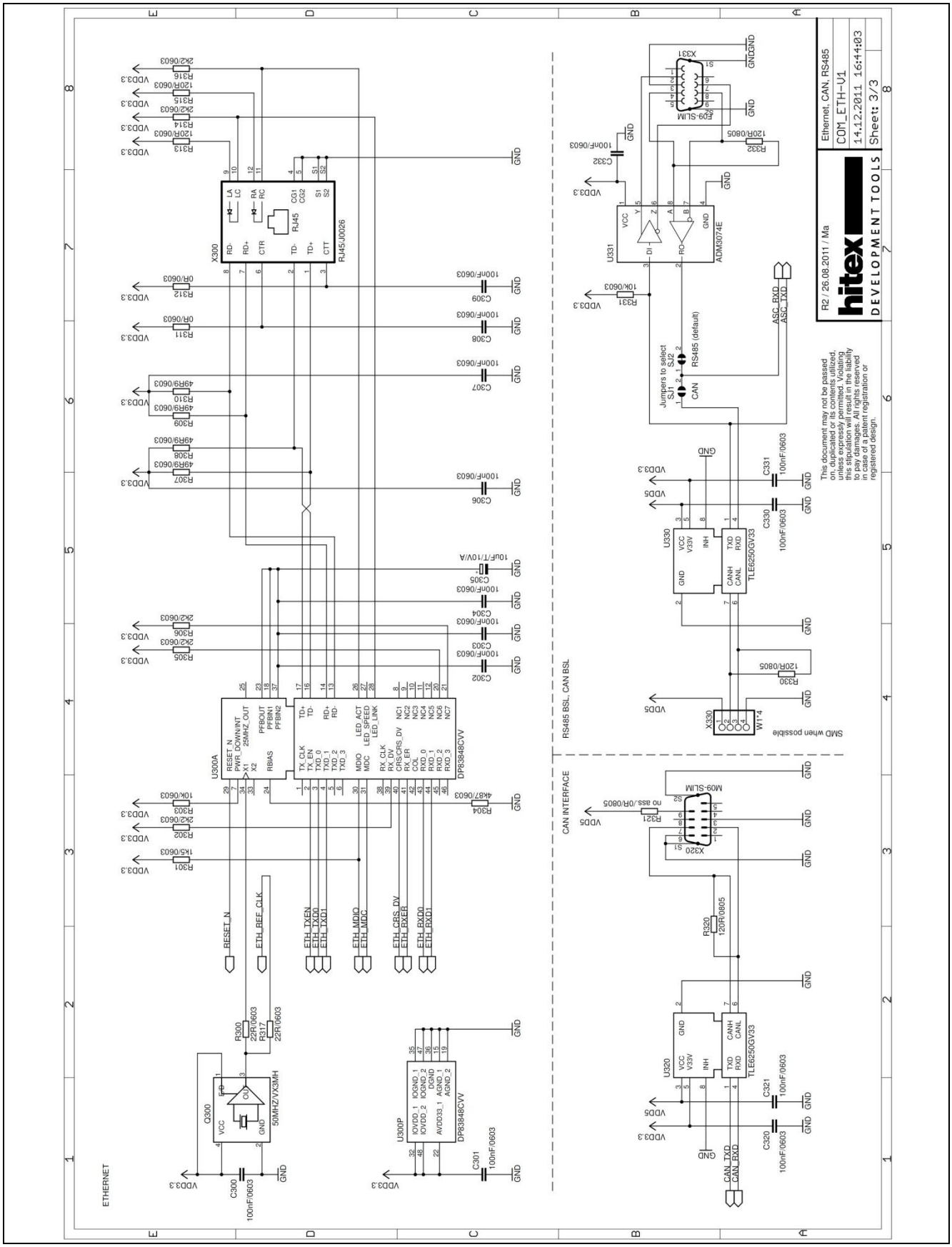

Figure 11 Ethernet, CAN, RS485

3.2 Layout and Geometry

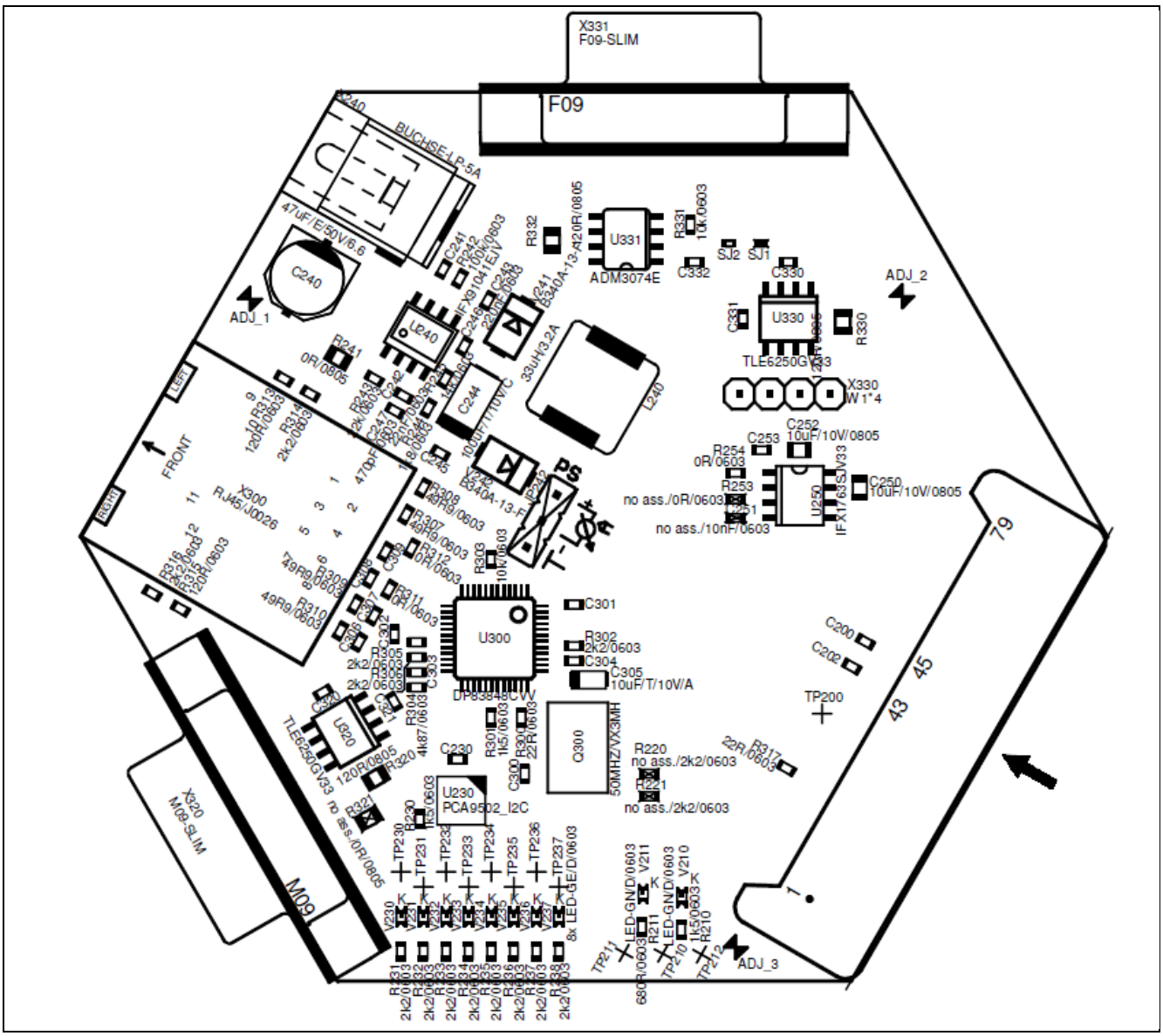

Figure 12 Ethernet/CAN/RS485 Interfaces Card Layout

3.3 Bill of Material

Table 13 Ethernet/CAN/RS485 Interfaces Card BOM

Sl. No.	Qty	Value	Device	Reference Designator
1	1	0R/0402	Resistor	SJ2
2	3	0R/0603	Resistor	R254, R311, R312
3	1	0R/0805	Resistor	R241
4	3	1k5/0603	Resistor	R210, R230, R301
5	1	1k8/0603	Resistor	R244
6	13	2k2/0603	Resistor	R231, R232, R233, R234, R235, R236, R237, R238, R302, R305, R306, R314, R316
7	1	4k87/0603	Resistor	R304
8	2	10k/0603	Resistor	R303, R331
9	2	10uF/10V/0805	Capacitor	C250, C252
10	1	10uF/T/10V/A	Capacitor	C305
11	1	14k/0603	Resistor	R245
12	2	22R/0603	Resistor	R300, R317
13	1	22k/0603	Resistor	R243
14	1	22nF/0603	Capacitor	C242
15	1	33uH/3.2A	Inductor, IHLP3232DZER330M11 Vishay/Dale	L240
16	1	47uF/E/50V/6.6	Capacitor, UWT1H470MCL1GS Nichicon	C240
17	4	49R9/0603	Resistor	R307, R308, R309, R310
18	1	50MHZ/VX3MH	Crystal, 50MHz 3,3V 7x5mm	Q300
19	1	100k/0603	Resistor	R242
20	21	100nF/0603	Resistor	C200, C202, C230, C241, C245, C246, C253, C300, C301, C302, C303, C304, C306, C307, C308, C309, C320, C321, C330, C331, C332
21	1	100uF/T/10V/C	Capacitor	C244
22	2	120R/0603	Resistor	R313, R315
23	3	120R/0805	Resistor	R320, R330, R332
24	1	220nF/0603	Capacitor	C243
25	1	470pF/0603	Capacitor	C247
26	1	680R/0603	Resistor	R211
27	1	ADM3074E	IC, ADM3074EARZ Analog Devices	U331
28	2	B340A-13-F	Diode, B340A-13-F Diodes Inc.	V241, V242
29	1	BUCHSE-LP-5A	Connector RAPC722X	X240
30	1	DP83848CVV	IC DP83848CVV National Semiconductor	U300
31	1	F09-SLIM	Connector DSUB9-	X331

Table 13 Ethernet/CAN/RS485 Interfaces Card BOM

Sl. No.	Qty	Value	Device	Reference Designator
			Female	
32	1	HSEC8-140-01-S-RA	Connector HSEC8-140-01-S-RA Samtec	X200
33	1	IFX1763SJV33	IC IFX1763SJV33 Infineon Technologies	U250
34	1	IFX91041EJV	IC IFX91041EJV Infineon PSOP-8 Vvar	U240
35	8	LED-GE/D/0603	LED	V230, V231, V232, V233, V234, V235, V236, V237
36	2	LED-GN/D/0603	LED	V210, V211
37	1	M09-SLIM	Connector DSUB9-Male	X320
38	1	PCA9502	IC PCA9502BS NXP, HVQFN-24	U230
39	1	RJ45/J0026	Connector J0026D21BNL Pulse	X300
40	2	TLE6250GV33	IC TLE6250GV33 Infineon Technologies	U320, U330
41	1	W1*4	Connector Pinheader 0.1" TH	X330
42	1	no ass./0R/0603	Resistor	R253
43	1	no ass./0R/0805	Resistor	R321
44	2	no ass./2k2/0603	Resistor	R220, R221
45	1	no ass./10nF/0603	Capacitor	C251
46	1	no ass./0R/0402	SMD-Pads	SJ1
47	1	no ass.	Pinheader 0.1" TH, Hitex PowerScale	JP242
48	12	no ass.	SMD-Pads	TP200, TP210, TP211, TP212, TP230, TP231, TP232, TP233, TP234, TP235, TP236, TP237

w w w . i n f i n e o n . c o m

Published by Infineon Technologies AG