Chipsmall Limited consists of a professional team with an average of over 10 year of expertise in the distribution of electronic components. Based in Hongkong, we have already established firm and mutual-benefit business relationships with customers from,Europe,America and south Asia,supplying obsolete and hard-to-find components to meet their specific needs.

With the principle of “Quality Parts,Customers Priority,Honest Operation,and Considerate Service”,our business mainly focus on the distribution of electronic components. Line cards we deal with include Microchip,ALPS,ROHM,Xilinx,Pulse,ON,Everlight and Freescale. Main products comprise IC,Modules,Potentiometer,IC Socket,Relay,Connector.Our parts cover such applications as commercial,industrial, and automotives areas.

We are looking forward to setting up business relationship with you and hope to provide you with the best service and solution. Let us make a better world for our industry!

Contact us

Tel: +86-755-8981 8866 Fax: +86-755-8427 6832
Email & Skype: info@chipsmall.com Web: www.chipsmall.com
Address: A1208, Overseas Decoration Building, #122 Zhenhua RD., Futian, Shenzhen, China

L4925

Very low drop voltage regulator

Features

- Operating DC supply voltage range 6 V to 28 V
- Transient supply voltage up to 40 V
- Extremely low quiescent current
- High precision output voltage
- Output current capability up to 500 mA
- Very low dropout voltage less than 0.6 V
- Reset circuit sensing the output voltage
- Programmable reset pulse delay with external capacitor
- Thermal shutdown and short circuit protections

PowerSO-20

Description

The L4925 is a monolithic integrated 5 V voltage regulator with a very low dropout output and additional functions such as power-on reset and programmable reset delay time.

It is designed for supplying microcomputer controlled systems especially in automotive applications.

Table 1. Device summary

Package	Order codes	
	Tube	Tape and reel
PowerSO-20	L4925PD	L4925PD013TR

Contents

1 Block and pin connections diagrams 5

1.1 Thermal data 5

2 Electrical specifications 6

2.1 Absolute maximum ratings 6

2.2 Electrical characteristics 6

3 Functional description 8

3.1 Voltage regulator 8

3.2 Reset circuit 9

4 Application information 11

4.1 Supply voltage transients 11

4.2 Application circuit 11

5 Package Informations 12

6 Revision history 13

List of tables

Table 2. Thermal data 5
Table 3. Absolute maximum ratings 6
Table 4. Electrical characteristics 6
Table 5. Document revision history 13

List of figures

Figure 1. Block diagram 5
Figure 2. PowerSO-20 pin connections (top view) 5
Figure 3. Foldback characteristics of V_O 8
Figure 4. Output voltage vs input voltage 9
Figure 5. Quiescent current vs supply voltage 9
Figure 6. Block circuit diagram 10
Figure 7. Reset output waveforms 10
Figure 8. Application circuit diagram 11
Figure 9. PowerSO-20 mechanical data and package dimensions 12

1 Block and pin connections diagrams

Figure 1. Block diagram

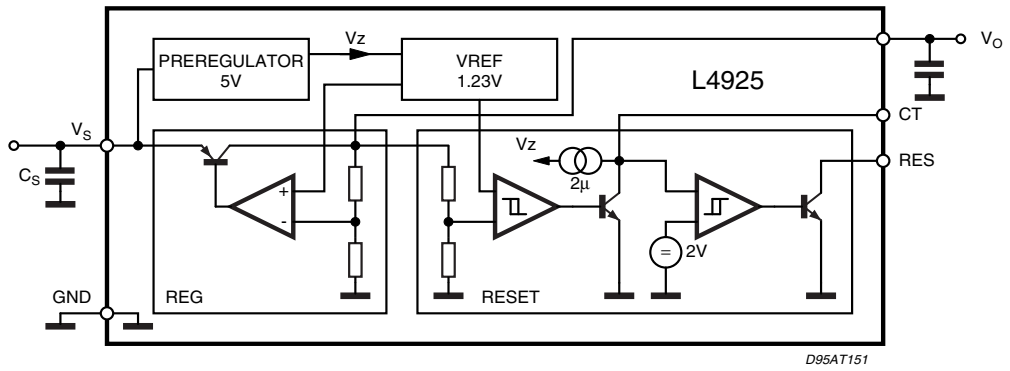

Figure 2. PowerSO-20 pin connections (top view)

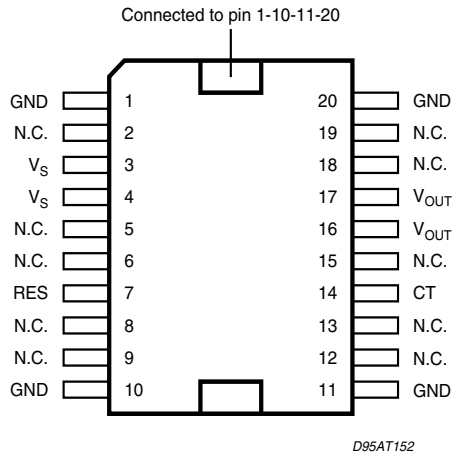

1.1 Thermal data

Table 2. Thermal data

Symbol	Parameter	PowerSO-20	Unit
$R_{th(j\text{-}amb)}$	Thermal resistance junction to ambient	15 to 60	°C/W
$R_{th(j\text{-}c)}$	Thermal resistance junction to case (max)	3.5	°C/W

2 Electrical specifications

2.1 Absolute maximum ratings

Table 3. Absolute maximum ratings

Symbol	Parameter	Value	Unit
V_{SDC}	DC operating supply voltage	28	V
V_{STR}	Transient supply voltage (t < 1s)	40	V
I_O	Output current	internally limited	
V_O	Output voltage	20	V
V_{RES}	Output voltage	20	V
I_{RES}	Output current	5	mA
T_{stg}	Storage temperature	-55 to 150	°C
T_j	Operating junction temperature	-40 to 150	°C
$T_{j\text{-}SD}$	Thermal shutdown-junction temperature	165	°C

Note: The circuit is ESD protected according to MIL-STD-883C. According to ISO/DIS 7637 the transients must be clamped with external circuitry (see Application Circuit).

2.2 Electrical characteristics

V_S =14 V; T_j = –40 to 125 °C unless otherwise specified.

Table 4. Electrical characteristics

Symbol	Parameter	Test condition	Min.	Typ.	Max.	Unit
V_O	Output voltage	V_I = 6 to 28 V; I_O = 1 to 500 mA	4.90	5	5.10	V
V_O	Output voltage	V_I = 35 V; T < 1 s; I_O = 1 to 500 mA			5.50	V
V_{DP}	Dropout voltage	I_O = 100 mA		0.2	0.3	V
		I_O = 500 mA		0.3	0.6	V
V_{IO}	Input to output voltage difference in undervoltage condition	V_I = 4 V; I_O = 100 mA			0.5	V
V_{OL}	Line regulation	V_I = 6 to 28 V; I_O = 1 to 1 mA			10	mV
V_{OLO}	Load regulation	I_O = 1 to 500 mA			50	mV
I_{LIM}	Current limit	V_O = 4.5 V;	550	1000	1500	mA
		V_O = 0; Foldback characteristic		250		mA
I_{QSE}	Quiescent current	I_O = 0.3 mA		190	360	µA
I_Q	Quiescent current	I_O = 500 mA			20	mA

Table 4. Electrical characteristics (continued)

Symbol	Parameter	Test condition	Min.	Typ.	Max.	Unit
Reset						
V_{RT}	Reset threshold voltage		4.2		4.8	V
V_{RTH}	Reset threshold		50	100	200	mV
t_{RD}	Reset pulse delay	C_T = 100 nF; t_R ≥100 µs	60	100	140	ms
t_{RR}	Reset reaction time	C_T = 100 nF;		5	30	µs
V_{RL}	Reset output low voltage	R_{RES} = 10 KΩ to V_O; V_S = ≥ 3 V			0.4	V
I_{RH}	Reset output high leakage current	V_{RES} = 5 V			1	µA
V_{CTth}	Delay comparator threshold			2		V
$V_{CTth\ hy}$	Delay comparator threshold hysteresis			200		mV

3 Functional description

The L4925 is a monolithic integrated voltage regulator, based on the STM modular voltage regulator approach. Several outstanding features and auxiliary functions are implemented to meet the requirements of supplying microprocessor systems in automotive applications. Nevertheless, it is suitable also in other applications where the present functions are required. The modular approach of this device allows to get easily also other features and functions when required.

3.1 Voltage regulator

The voltage regulator uses an Isolated Collector Vertical PNP transistor as a regulating element. With this structure very low dropout voltage at currents up to 500 mA is obtained.

Figure 3. Foldback characteristics of V_O

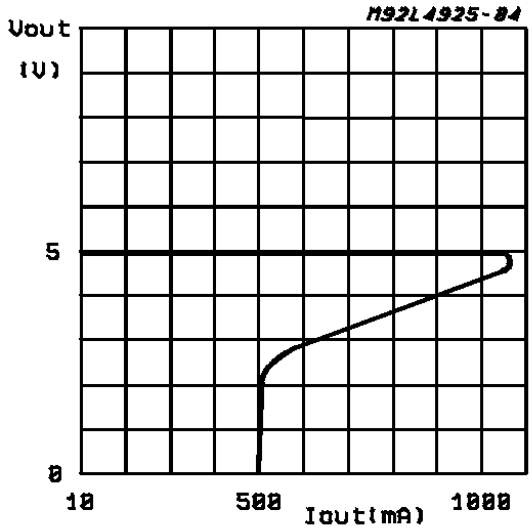

The dropout operation of the standby regulator is maintained down to 3 V input supply voltage. The output voltage is regulated up to the transient input supply voltage of 35 V. With this feature no functional interruption due to overvoltage pulses is generated.

The typical curve showing the standby output voltage as a function of the input supply voltage is shown in *Figure 4*.

The current consumption of the device (quiescent current) is less than 250 µA. To reduce the quiescent current peak in the undervoltage region and to improve the transient response in this region, the dropout voltage is controlled.

The quiescent current as a function of the supply input voltage is shown in *Figure 5*.

Figure 4. Output voltage vs input voltage

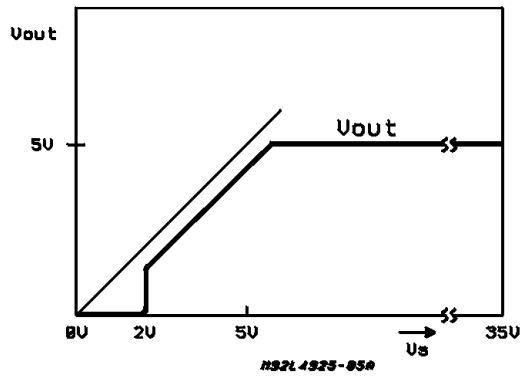

Figure 5. Quiescent current vs supply voltage

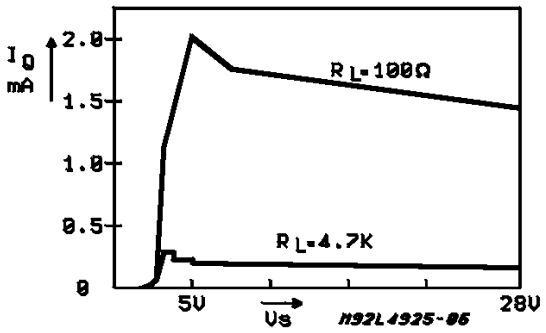

3.2 Reset circuit

The block circuit diagram of the reset circuit is shown in *Figure 6*. The reset circuit supervises the output voltage. The reset threshold of 4.5 V is defined with the internal reference voltage and standby output divider. The reset pulse delay time t_{RD}, is defined with the charge time of an external capacitor CT:

$$t_{RD} = \frac{C_T \cdot 2V}{2\mu A}$$

The reaction time of the reset circuit originates from the discharge time limitation of the reset capacitor CT and it is proportional to the value of CT. The reaction time of the reset circuit increases the noise immunity. Standby output voltage drops below the reset threshold only a bit longer than the reaction time results in a shorter reset delay time.

The nominal reset delay time is generated for standby output voltage drops longer than approximately 50 ms. The typical reset output waveforms are shown in *Figure 7*.

Figure 6. Block circuit diagram

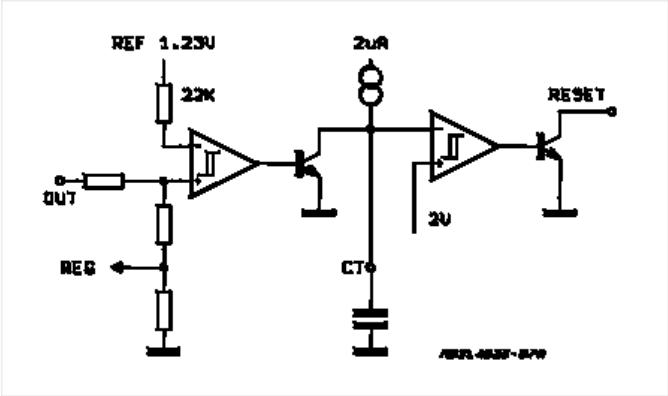

Figure 7. Reset output waveforms

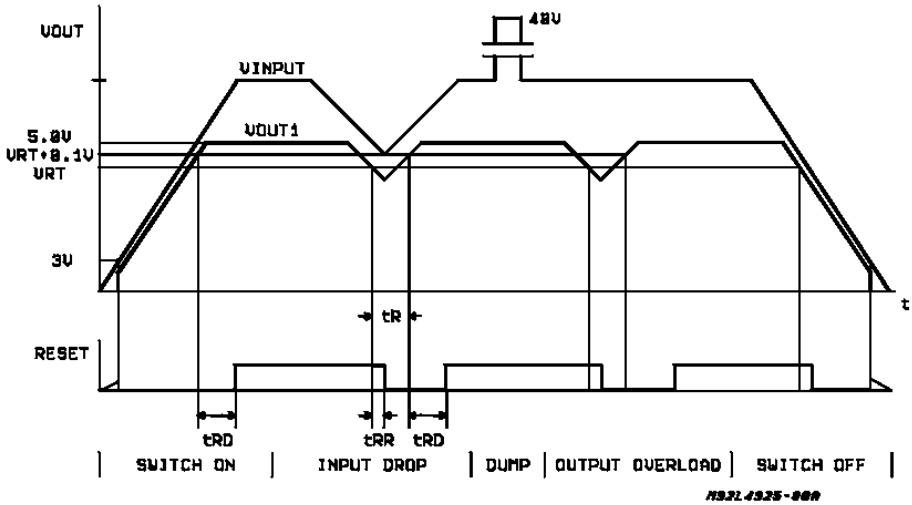

4 Application information

4.1 Supply voltage transients

High supply voltage transients can cause a reset output signal disturbance.

For supply voltage greater than 8 V the circuit shows a high immunity of the reset output against supply transients of more than 100 V/ms. For supply voltage lower than 8 V, supply transients of more than 0.4 V/ms. can cause a reset signal disturbance.

4.2 Application circuit

Figure 8. Application circuit diagram

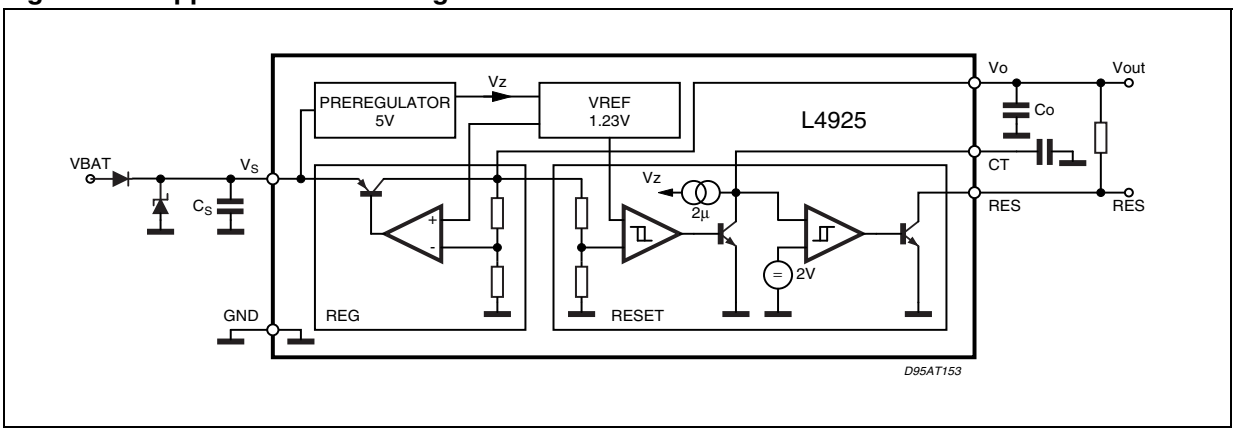

For stability: $C_S \geq 1$ µF; $C_O \geq 10$ µF; ESR $\leq 2.5\ \Omega$ at 10 KHz

Recommended for application: $C_S = C_O = 10$ µF to 100 µF

5 Package Informations

Figure 9. PowerSO-20 mechanical data and package dimensions

DIM.	mm			inch		
	MIN.	TYP.	MAX.	MIN.	TYP.	MAX.
A			3.6			0.142
a1	0.1		0.3	0.004		0.012
a2			3.3			0.130
a3	0		0.1	0.000		0.004
b	0.4		0.53	0.016		0.021
c	0.23		0.32	0.009		0.013
D (1)	15.8		16	0.622		0.630
D1 (2)	9.4		9.8	0.370		0.386
E	13.9		14.5	0.547		0.570
e		1.27			0.050	
e3		11.43			0.450	
E1 (1)	10.9		11.1	0.429		0.437
E2			2.9			0.114
E3	5.8		6.2	0.228		0.244
G	0		0.1	0.000		0.004
H	15.5		15.9	0.610		0.626
h			1.1			0.043
L	0.8		1.1	0.031		0.043
N	8˚(typ.)					
S	8˚(max.)					
T		10			0.394	

(1) "D and E1" do not include mold flash or protusions.
- Mold flash or protusions shall not exceed 0.15mm (0.006")
- Critical dimensions: "E", "G" and "a3".

(2) For subcontractors, the limit is the one quoted in jedec MO-166

OUTLINE AND MECHANICAL DATA

Weight: 1.9gr

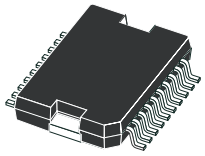

JEDEC MO-166

PowerSO-20

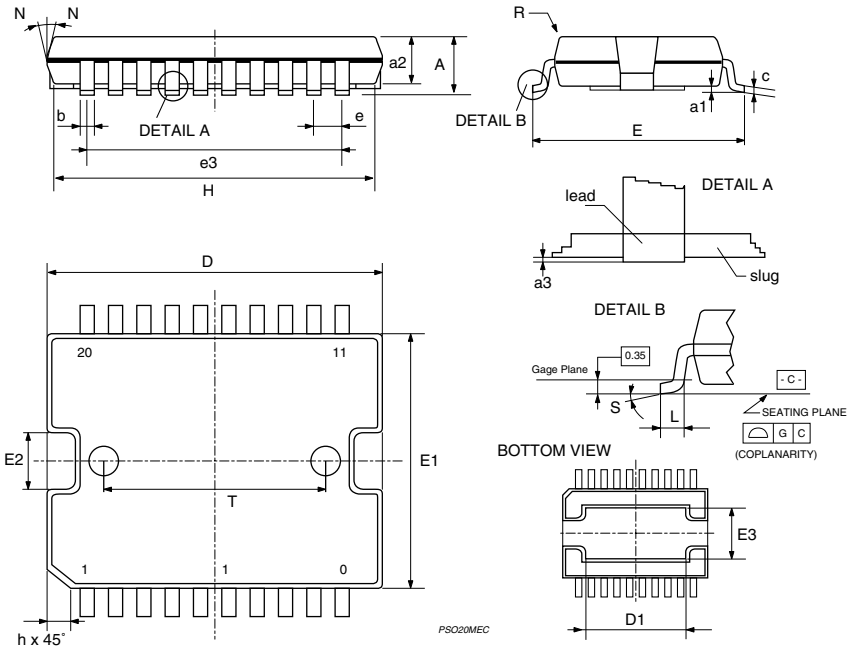

6 Revision history

Table 5. Document revision history

Date	Revision	Changes
01-Oct-2003	4	First issue in EDOCD DMS
18-Nov-2005	5	Added GND pins to fig. 4 Added order code and changed the formatting style in compliance with the new template
03-Feb-2006	6	Reset Threshold Voltage changed from 4.5V / 5.2V (min/max) to 4.2V / 4.8V on *Table 4.*
09-Feb-2010	7	Reformatted entire document. Removed PENTAWATT package Updated *Table 2: Thermal data*
20-Sep-2013	8	Updated disclaimer.

Please Read Carefully:

Information in this document is provided solely in connection with ST products. STMicroelectronics NV and its subsidiaries (“ST”) reserve the right to make changes, corrections, modifications or improvements, to this document, and the products and services described herein at any time, without notice.

All ST products are sold pursuant to ST’s terms and conditions of sale.

Purchasers are solely responsible for the choice, selection and use of the ST products and services described herein, and ST assumes no liability whatsoever relating to the choice, selection or use of the ST products and services described herein.

No license, express or implied, by estoppel or otherwise, to any intellectual property rights is granted under this document. If any part of this document refers to any third party products or services it shall not be deemed a license grant by ST for the use of such third party products or services, or any intellectual property contained therein or considered as a warranty covering the use in any manner whatsoever of such third party products or services or any intellectual property contained therein.

UNLESS OTHERWISE SET FORTH IN ST’S TERMS AND CONDITIONS OF SALE ST DISCLAIMS ANY EXPRESS OR IMPLIED WARRANTY WITH RESPECT TO THE USE AND/OR SALE OF ST PRODUCTS INCLUDING WITHOUT LIMITATION IMPLIED WARRANTIES OF MERCHANTABILITY, FITNESS FOR A PARTICULAR PURPOSE (AND THEIR EQUIVALENTS UNDER THE LAWS OF ANY JURISDICTION), OR INFRINGEMENT OF ANY PATENT, COPYRIGHT OR OTHER INTELLECTUAL PROPERTY RIGHT.

ST PRODUCTS ARE NOT DESIGNED OR AUTHORIZED FOR USE IN: (A) SAFETY CRITICAL APPLICATIONS SUCH AS LIFE SUPPORTING, ACTIVE IMPLANTED DEVICES OR SYSTEMS WITH PRODUCT FUNCTIONAL SAFETY REQUIREMENTS; (B) AERONAUTIC APPLICATIONS; (C) AUTOMOTIVE APPLICATIONS OR ENVIRONMENTS, AND/OR (D) AEROSPACE APPLICATIONS OR ENVIRONMENTS. WHERE ST PRODUCTS ARE NOT DESIGNED FOR SUCH USE, THE PURCHASER SHALL USE PRODUCTS AT PURCHASER’S SOLE RISK, EVEN IF ST HAS BEEN INFORMED IN WRITING OF SUCH USAGE, UNLESS A PRODUCT IS EXPRESSLY DESIGNATED BY ST AS BEING INTENDED FOR “AUTOMOTIVE, AUTOMOTIVE SAFETY OR MEDICAL” INDUSTRY DOMAINS ACCORDING TO ST PRODUCT DESIGN SPECIFICATIONS. PRODUCTS FORMALLY ESCC, QML OR JAN QUALIFIED ARE DEEMED SUITABLE FOR USE IN AEROSPACE BY THE CORRESPONDING GOVERNMENTAL AGENCY.

Resale of ST products with provisions different from the statements and/or technical features set forth in this document shall immediately void any warranty granted by ST for the ST product or service described herein and shall not create or extend in any manner whatsoever, any liability of ST.

ST and the ST logo are trademarks or registered trademarks of ST in various countries.
Information in this document supersedes and replaces all information previously supplied.
The ST logo is a registered trademark of STMicroelectronics. All other names are the property of their respective owners.

© 2013 STMicroelectronics - All rights reserved

STMicroelectronics group of companies

Australia - Belgium - Brazil - Canada - China - Czech Republic - Finland - France - Germany - Hong Kong - India - Israel - Italy - Japan - Malaysia - Malta - Morocco - Philippines - Singapore - Spain - Sweden - Switzerland - United Kingdom - United States of America

www.st.com