Chipsmall Limited consists of a professional team with an average of over 10 year of expertise in the distribution of electronic components. Based in Hongkong, we have already established firm and mutual-benefit business relationships with customers from,Europe,America and south Asia,supplying obsolete and hard-to-find components to meet their specific needs.

With the principle of “Quality Parts,Customers Priority,Honest Operation,and Considerate Service”,our business mainly focus on the distribution of electronic components. Line cards we deal with include Microchip,ALPS,ROHM,Xilinx,Pulse,ON,Everlight and Freescale. Main products comprise IC,Modules,Potentiometer,IC Socket,Relay,Connector.Our parts cover such applications as commercial,industrial, and automotives areas.

We are looking forward to setting up business relationship with you and hope to provide you with the best service and solution. Let us make a better world for our industry!

Contact us

Tel: +86-755-8981 8866 Fax: +86-755-8427 6832
Email & Skype: info@chipsmall.com Web: www.chipsmall.com
Address: A1208, Overseas Decoration Building, #122 Zhenhua RD., Futian, Shenzhen, China

TECHNICAL DATA

'' D '' SUBMINIATURE CONNECTORS

SHELL : Steel.

BODY : Glass filled thermoplastic.
Flame retardant to UL 94 V-0.
Colour : Black.

CONTACTS : Material for sockets : bronze.
Material for pins : brass.
Finish of contact mating area :
Gold over Nickel.

ELECTRICAL: Voltage rating 300 V eff at 50Hz.
Nominal current 7,5 A.

Contact resistance <8.5m Ohms.
Insulation resistance >5000 M Ohms.

CLIMATIC: Temperature range -55°C up to +85° C
Damp heart 21 days (40° C - 95 % RH)
Other climatic specifications in accordance with NF C 93-425

MECHANICAL: Mating and unmating force size E 30 N max. 3.5 N mini.
A 50 N max. 4.4 N mini.
B 83 N max. 8.0 N mini.
C 123 N max. 11.0 N mini.
D 166 N max. 14.5 N mini.

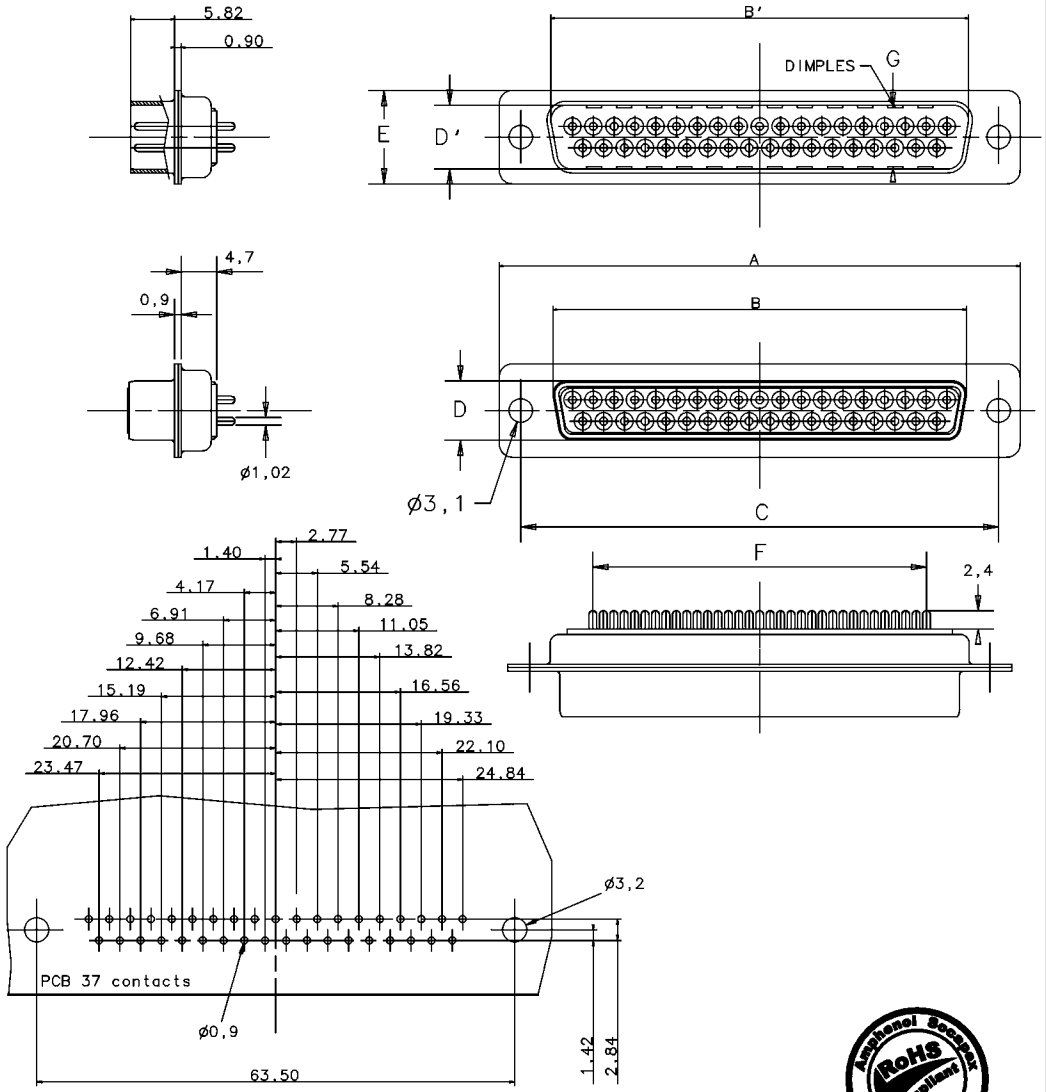

L 77D C 37 S V

- L = RoHS
- 77D Tinned shell / 717D Tinned shell with dimples
- Shell size : E - A - B - C - D
- Mounting type : without
- Configuration: 9-15-25-37-50
- Contact type : S = female / P = male
- Straight Contact

Taille boitier	A	B'	B	C	D'	D	E	F ±0,05	Pas	G	*
E	31,19 30,43	16,46 16,21	17,04 16,79	25,12 24,87	8,03 7,77	8,48 8,23	12,93 12,17	10,98	2.74	7,62	2x3
A	39,52 38,76	24,79 24,54	25,37 25,12	33,45 33,20	8,03 7,77	8,48 8,23	12,93 12,17	19,20	2.74	7,62	2x5
B	53,42 52,65	38,51 38,25	39,09 38,84	47,17 46,91	8,03 7,77	8,48 8,23	12,93 12,17	33,12	2.76	7,62	2x8
C	69,70 68,94	54,97 54,71	55,55 55,30	63,63 63,37	8,03 7,77	8,48 8,23	12,93 12,17	49,68	2.76	7,62	2x12
D	67,31 66,55	52,56 52,30	52,93 52,68	61,24 60,99	10,87 10,62	11,33 10,95	15,75 14,99	44,20	2.76	10,5	2x12

Amphenol Socapex
Usine de Dole

ECHELLE 2 | ENSEMBLE

IND.	MODIFICATION	DATE	Execut	Approb
A	Creation plan	13/03/2006	Vallot	

N SERIE 017F

DESIGNATION L**7D****V

DOSSIER:NOTICE-17D

N CLIENT | N OUTIL | N ETUDE | DATE DU TIRAGE | 17D

COMMUNICATION ET UTILISATION INTERDITES SAUF AUTORISATION