Chipsmall Limited consists of a professional team with an average of over 10 year of expertise in the distribution of electronic components. Based in Hongkong, we have already established firm and mutual-benefit business relationships with customers from,Europe,America and south Asia,supplying obsolete and hard-to-find components to meet their specific needs.

With the principle of “Quality Parts,Customers Priority,Honest Operation,and Considerate Service”,our business mainly focus on the distribution of electronic components. Line cards we deal with include Microchip,ALPS,ROHM,Xilinx,Pulse,ON,Everlight and Freescale. Main products comprise IC,Modules,Potentiometer,IC Socket,Relay,Connector.Our parts cover such applications as commercial,industrial, and automotives areas.

We are looking forward to setting up business relationship with you and hope to provide you with the best service and solution. Let us make a better world for our industry!

Contact us

Tel: +86-755-8981 8866 Fax: +86-755-8427 6832
Email & Skype: info@chipsmall.com Web: www.chipsmall.com
Address: A1208, Overseas Decoration Building, #122 Zhenhua RD., Futian, Shenzhen, China

This document is the property of Amphenol Corporation and is delivered on the express condition that it is not to be disclosed, reproduced or used, in whole or in part, for manufacture or sale by anyone other than Amphenol Corporation without its prior concent, & that no right is granted to disclose or to use any information in this document.

REVISIONS				
SYM	ECN	DESCRIPTION	DATE	APPROVED
1			12/10/08	

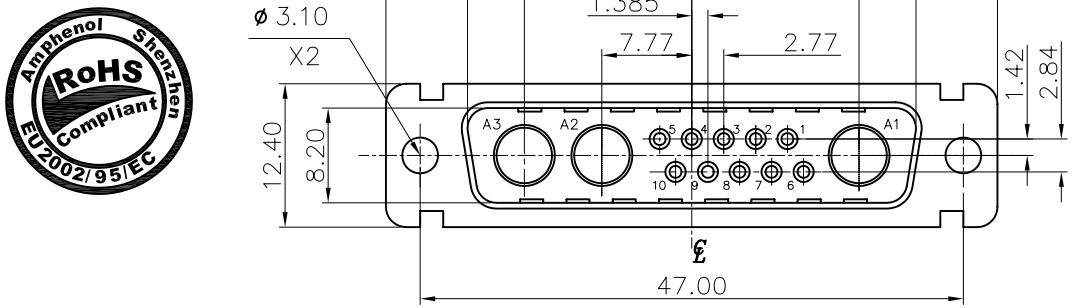

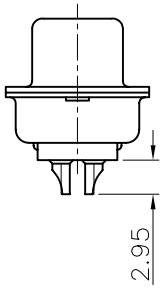

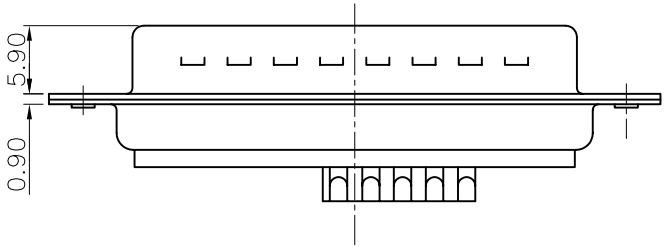

Customer drawing

D-SUB TECHNICAL DATA

SHELL : Steel 2.5um(100u") min. tin over 1.25um(50u") min. nickel

BODY : Glass filled thermoplastic.
Flame retarding to UL94 V-0 Color Black

CONTACTS : Brass, 0.4um(15u") min. gold over 1.25um(50u") min. nickel

ELECTRICAL : Voltage rating 300 V RMS at 50 Hz
Current rating 7.5A
Withstanding Voltage >1000 V RMS at 50 Hz for one minute
Insulation resistance >5000 M Ohms
Contact resistance 20 mOhms max.

CLIMATIC : Temperature range -55 °C up to 155°C
Damp heat 56 days(40 °C-95% HR)
Salt spray 48 hours

MARKING : Amphenol-...(Series No.)
Commercial reference
Manufacturing date

PRODUCT CODE

L 717TW B 13W3 P

- L: RoHS Compliance
- 717TW: tin plated shell with dimples
- Shell Size :B
- Configuration: 13W3
- Contact type: S:Female P: Male

UNLESS OTHERWISE SPECIFIED TOLERANCES		APPROVAL	DATE
U.S.	METRIC	DRAWN Christine	12/10/08
.X +/-	0.50	CHECKED Lit.wang	12/10/08
.XX +/-	0.30	CHECKED	
.XXX +/-	0.20		
FRACTIONS +/-			
ANGLES +/-	2°		
FOR MATERIALS AND FINISHES SEE NOTES		DRAWING FILE :	
REMOVE SHARP EDGES		ANGLE OF PROJECTION	
DIMENSIONS			
U.S.	INCHES		
METRIC	MM		

Amphenol®

TITLE: Hybrid D-SUB connectors, TW series

SIZE	DRAWING NO.	REV.
A4	C L717TWB13W3P	1
SCALE NONE	SHEET 1 OF 1	