Chipsmall Limited consists of a professional team with an average of over 10 year of expertise in the distribution of electronic components. Based in Hongkong, we have already established firm and mutual-benefit business relationships with customers from,Europe,America and south Asia,supplying obsolete and hard-to-find components to meet their specific needs.

With the principle of “Quality Parts,Customers Priority,Honest Operation,and Considerate Service”,our business mainly focus on the distribution of electronic components. Line cards we deal with include Microchip,ALPS,ROHM,Xilinx,Pulse,ON,Everlight and Freescale. Main products comprise IC,Modules,Potentiometer,IC Socket,Relay,Connector.Our parts cover such applications as commercial,industrial, and automotives areas.

We are looking forward to setting up business relationship with you and hope to provide you with the best service and solution. Let us make a better world for our industry!

Contact us

Tel: +86-755-8981 8866 Fax: +86-755-8427 6832
Email & Skype: info@chipsmall.com Web: www.chipsmall.com
Address: A1208, Overseas Decoration Building, #122 Zhenhua RD., Futian, Shenzhen, China

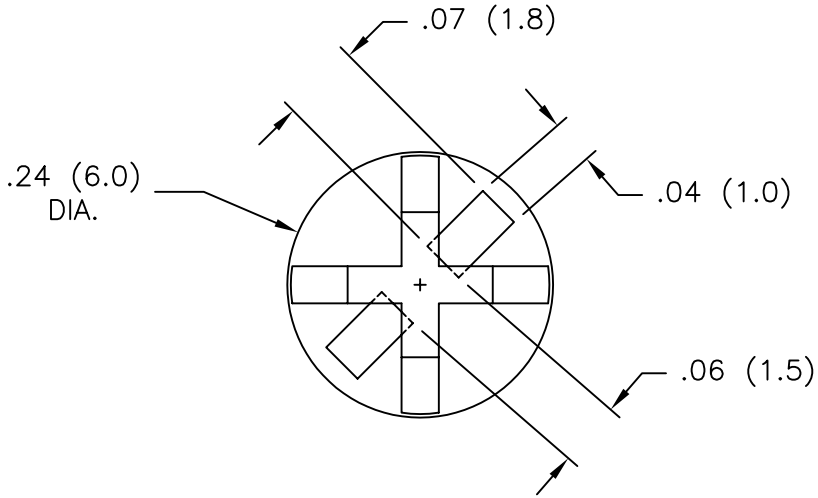

PART NO.	"A"
LEDS2E-3-01	3/16 (4.8)
LEDS2E-4-01	1/4 (6.5)
LEDS2E-6-01	3/8 (9.5)
LEDS2E-8-01	1/2 (12.7)
LEDS2E-10-01	5/8 (15.9)
LEDS2E-12-01	3/4 (19.1)
LEDS2E-14-01	7/8 (22.2)
LEDS2E-16-01	1 (25.4)

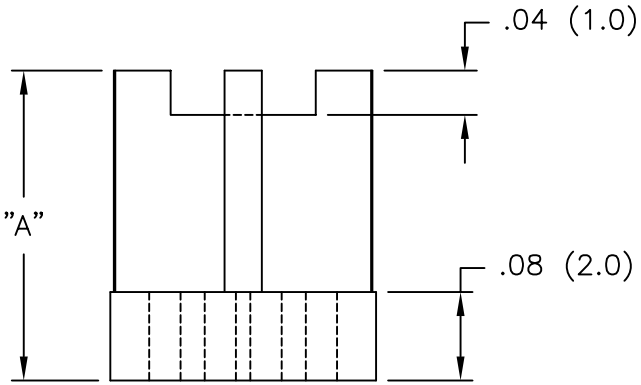

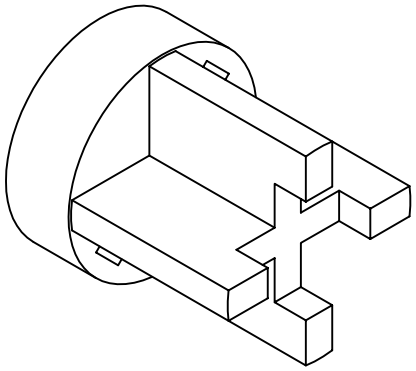

NOTES:

1. MATERIAL: NYLON 6/6 (RMS-01)
   FLAME RETARDANT, NYLON (RMS-19),
   AVAILABLE BY SPECIAL ORDER ONLY.
   TO ORDER, REPLACE "-01" WITH "-19"
2. COLOR: NATURAL.

REV	DESCRIPTION	ENGR DATE
E	ADDED MAT'L NOTES	SM 06.05.02
D	CHANGED FILE NO.	SM 02.27.02
C	CORRECTED DIM .04 & .08	SM 02.13.01
B	COMPLETELY REDRAWN TO UK NEW STYLE	JK 9.10.99
A	ORIGINALLY DRAWN BY JB	JB 1.25.96

TITLE: LED SPACER (TYPE 2E)

DWG IN IN (MM)

TOLERANCES UNLESS NOTED
.XX=±.010
.XXX=±.005
FRAC=±1/64
ANG=±1°

FILE # LEDS2E
MAT'L: SEE NOTES
RE: RICHCO, INC.

DWN: JB
DT: 1.25.96
APP:
DT:

RICHCO INC.
PO BOX 804238,CHICAGO,60680
(773) 539-4060

FINAL

PART # SEE TABLE

PRINT TYPE CA