Chipsmall Limited consists of a professional team with an average of over 10 year of expertise in the distribution of electronic components. Based in Hongkong, we have already established firm and mutual-benefit business relationships with customers from,Europe,America and south Asia,supplying obsolete and hard-to-find components to meet their specific needs.

With the principle of “Quality Parts,Customers Priority,Honest Operation,and Considerate Service”,our business mainly focus on the distribution of electronic components. Line cards we deal with include Microchip,ALPS,ROHM,Xilinx,Pulse,ON,Everlight and Freescale. Main products comprise IC,Modules,Potentiometer,IC Socket,Relay,Connector.Our parts cover such applications as commercial,industrial, and automotives areas.

We are looking forward to setting up business relationship with you and hope to provide you with the best service and solution. Let us make a better world for our industry!

Contact us

Tel: +86-755-8981 8866 Fax: +86-755-8427 6832
Email & Skype: info@chipsmall.com Web: www.chipsmall.com
Address: A1208, Overseas Decoration Building, #122 Zhenhua RD., Futian, Shenzhen, China

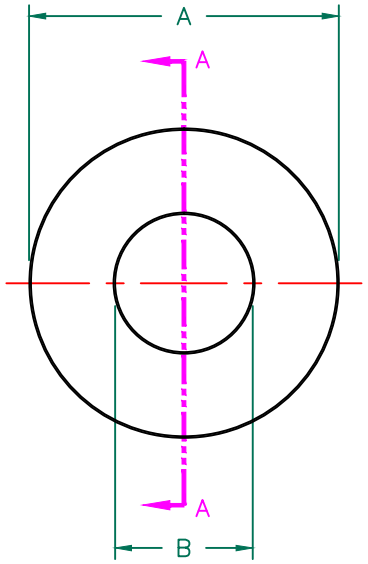

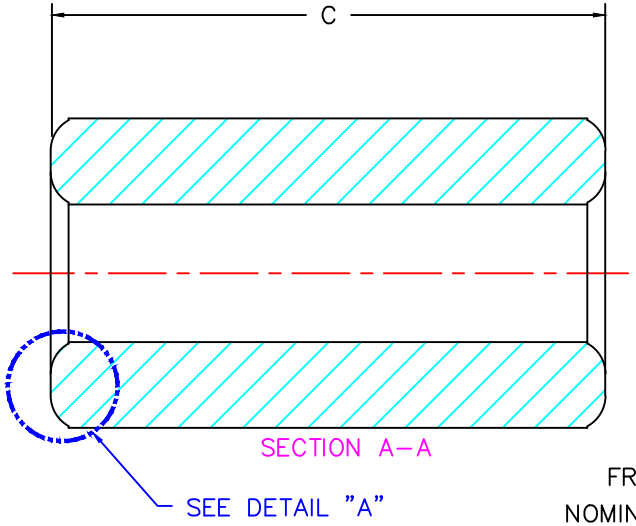

SCALE DRAWING 1:1

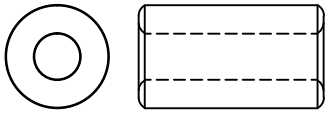

LFB143064–000

RoHS

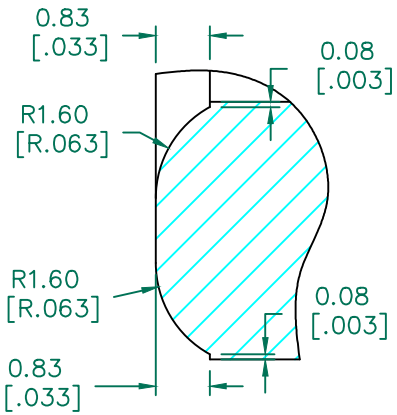

DETAIL "A"
CHAMFER
SCALE=9:1

Z vs. FREQUENCY
1 TURN, 2, AND 3 TURNS
(REF. ONLY)

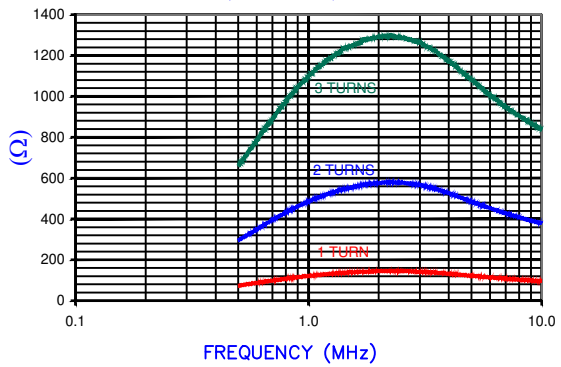

AGILENT E4991A RF Impedance/Material Analyzer
HP 16092A Test Fixture REF# 2695

IMPEDANCE (Z) NET SEE NOTE 1

FREQUENCY	500 KHz	1 MHz	5 MHz
NOMINAL (REF.) 1 TURN	70 Ω	122 Ω	120 Ω
MINIMUM (SPEC.) 1 TURN	– Ω	97 Ω	– Ω
NOMINAL (REF.) 2 TURNS	290 Ω	490 Ω	480 Ω
NOMINAL (REF.) 3 TURNS	650 Ω	1100 Ω	1080 Ω

TEST CRITERIA

METER	HP4396A OR EQUIVALENT
FIXTURE	HP16092A OR EQUIVALENT

NOTES:

1. NET IMPEDANCE IS IMPEDANCE OF THE FERRITE CORE ONLY. ALL IMPEDANCE CONTRIBUTION FROM TEST WIRE AND FIXTURES HAS BEEN REMOVED.
2. COSMETIC SPECIFICATION REFER TO WI–QA–038.

FERRITE CORE DIMENSIONS (SPEC):

A	14.27 [.562]	±	0.40 [.016]
B	6.35 [.250]	±	0.40 [.016]
C	28.58 [1.125]	±	0.70 [.028]

WEIGHT/1000 17.29 kgs [38.12 Lbs]

DIMENSIONS ARE IN mm [INCHES].

REV	DESCRIPTION	DATE	INT
E	UPDATE TOLERANCE AND DETAIL A	07/06/17	QIU
D	UPDATE COMPANY LOGO	07/13/08	TMB
C	REMOVE MIN SPEC @ 500 KHz & 5 MHz	02/10/06	TMB
B	UPDATE TOLS. ON DIMENSIONS A,B&C ADD TEST REF TO CURVE	12/22/04	JRK
A	ORIGINAL DRAFT	09/30/02	TMB

This print is the property of Laird Tech. and is loaned in confidence subject to return upon request and with the understanding that no copies shall be made without the written consent of Laird Tech. All rights to design or invention are reserved.

Laird

PROJECT/PART NUMBER:	REV	PART TYPE:	DRAWN BY:
LFB143064–000	E	FERRITE CORE	TMB

DATE:	SCALE:	MATERIAL:
09/30/02	3:1	LF

CAD #	TOOL #
LFB143064–000–E	B0562