Chipsmall Limited consists of a professional team with an average of over 10 year of expertise in the distribution of electronic components. Based in Hongkong, we have already established firm and mutual-benefit business relationships with customers from,Europe,America and south Asia,supplying obsolete and hard-to-find components to meet their specific needs.

With the principle of “Quality Parts,Customers Priority,Honest Operation,and Considerate Service”,our business mainly focus on the distribution of electronic components. Line cards we deal with include Microchip,ALPS,ROHM,Xilinx,Pulse,ON,Everlight and Freescale. Main products comprise IC,Modules,Potentiometer,IC Socket,Relay,Connector.Our parts cover such applications as commercial,industrial, and automotives areas.

We are looking forward to setting up business relationship with you and hope to provide you with the best service and solution. Let us make a better world for our industry!

Contact us

Tel: +86-755-8981 8866 Fax: +86-755-8427 6832
Email & Skype: info@chipsmall.com Web: www.chipsmall.com
Address: A1208, Overseas Decoration Building, #122 Zhenhua RD., Futian, Shenzhen, China

THIS COPY IS PROVIDED ON A RESTRICTED BASIS AND IS NOT TO BE USED IN ANY WAY DETRIMENTAL TO THE INTERESTS OF PANDUIT CORP.

PANDUIT P/N	WEIGHT
LMD3	.07 LBS/10 PCS. .3 G/10 PCS.

A

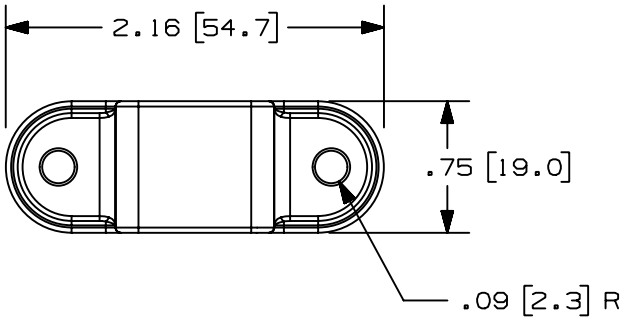

NOTES:

1. SEE CURRENT CATALOG FOR ADDITIONAL PART NUMBER SUFFIXES TO INDICATE COLOR AND OR PACKAGE QUANTITY.
2. DIMENSIONS IN PARENTHESIS ARE IN METRIC.
3. INTERFERENCE FIT BETWEEN STRAP AND RACEWAY FOR EASE OF INSTALLATION.
4. STRAPS CAN BE USED AS COUPLER BETWEEN RACEWAY SECTIONS.
5. STRAPS CAN BE USED WITH LD AND LDP RACEWAYS TO PROVIDE COMPLETE TAMPER RESISTANCE. B

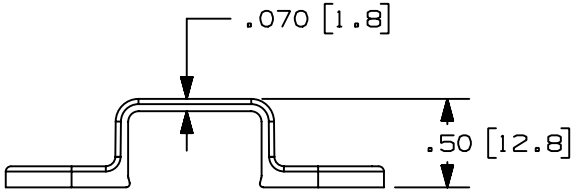

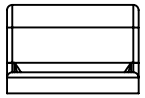

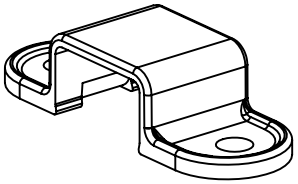

REV	DATE	BY	CHK	DESCRIPTION	ECN - R		CUST	SUP
2	03-08-04	JHEP	RGRO	B. REMOVED CD FROM NOTE 5	35541-44	RGRO	RGRO	
1	07-08-99	DW	HIW	A. REVISED MATERIAL AND WEIGHT	35541-44	HIW	CEF	
R	10-02-96	PM	CEF	RELEASED TO PRODUCTION	35541-44	CEF	CEF	

CAD FILENAME/LAYERS: D35541CR_LMD3_C_02.PRT

PANDUIT CORP. TINLEY PARK, ILLINOIS

MOUNTING STRAP FOR LDS3
DOUBLE HOLE (LMD3)
CUSTOMER DRAWING

UNLESS OTHERWISE SPECIFIED, DIMENSIONAL TOLERANCES ARE:
(.X) ± (.XXX) ±.010 [.3]
(.XX) ±.03 [.8] ANGLES ±

UNLESS OTHERWISE SPECIFIED, ALL DIMENSIONS ARE GIVEN IN INCHES, THIRD ANGLE PROJECTION.

DRAWN BY: PM
DATE: 10-02-96
CHK'D: CEF
MAT'L: PVC A
SCALE: FULL
DRAWING NO.: 35541-44
DWG SIZE: A