Chipsmall Limited consists of a professional team with an average of over 10 year of expertise in the distribution of electronic components. Based in Hongkong, we have already established firm and mutual-benefit business relationships with customers from,Europe,America and south Asia,supplying obsolete and hard-to-find components to meet their specific needs.

With the principle of “Quality Parts,Customers Priority,Honest Operation,and Considerate Service”,our business mainly focus on the distribution of electronic components. Line cards we deal with include Microchip,ALPS,ROHM,Xilinx,Pulse,ON,Everlight and Freescale. Main products comprise IC,Modules,Potentiometer,IC Socket,Relay,Connector.Our parts cover such applications as commercial,industrial, and automotives areas.

We are looking forward to setting up business relationship with you and hope to provide you with the best service and solution. Let us make a better world for our industry!

Contact us

Tel: +86-755-8981 8866 Fax: +86-755-8427 6832
Email & Skype: info@chipsmall.com Web: www.chipsmall.com
Address: A1208, Overseas Decoration Building, #122 Zhenhua RD., Futian, Shenzhen, China

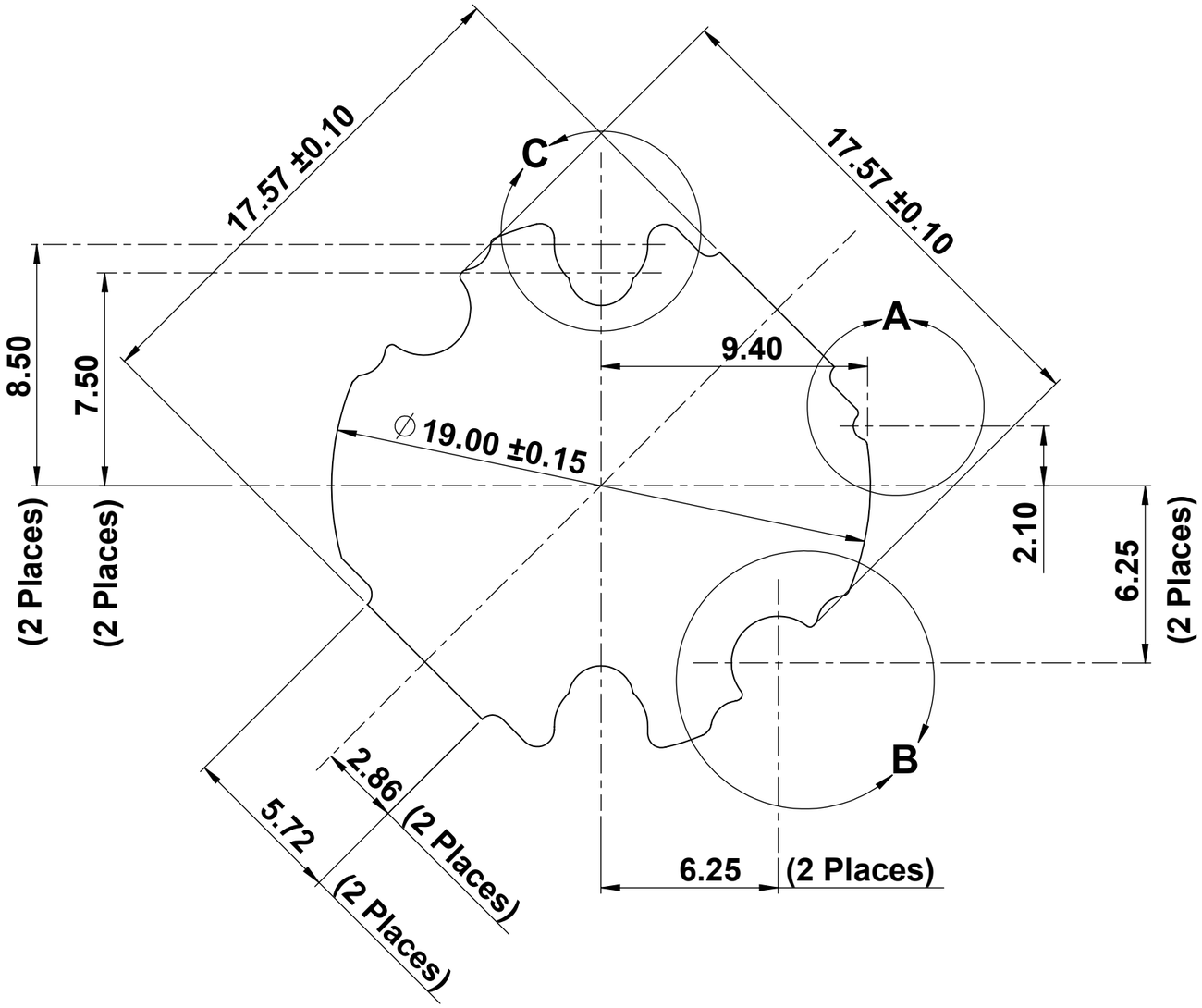

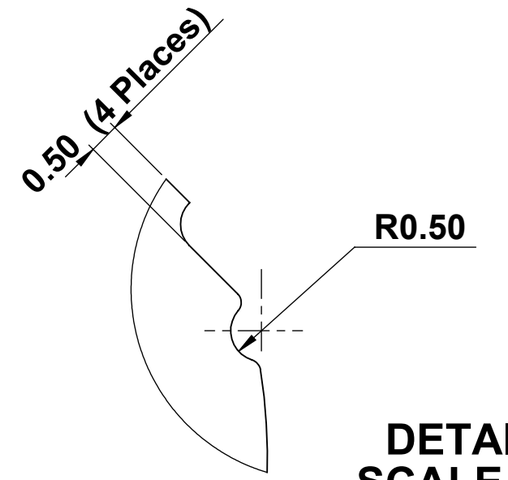

DETAIL A
SCALE 10 : 1

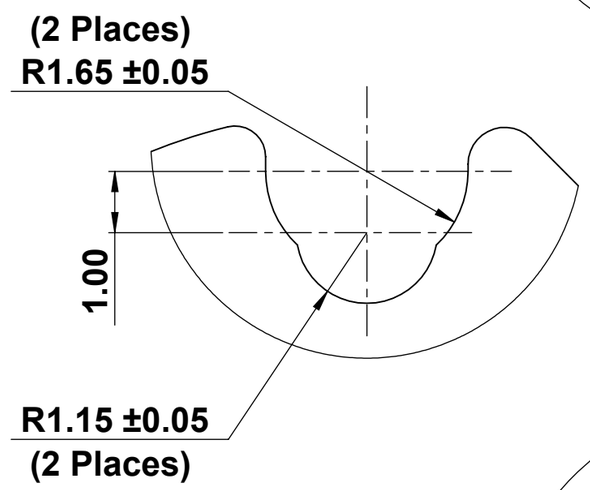

DETAIL C
SCALE 10 : 1

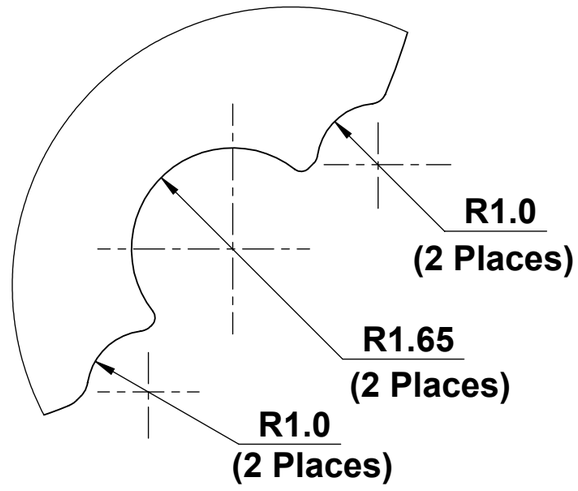

DETAIL B
SCALE 10 : 1

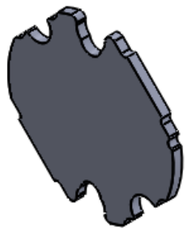

3D View
Scale:- 2:1

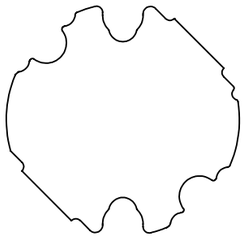

REFERENCE VIEW
Scale:- 2:1

UNLESS OTHERWISE SPECIFIED: DIMENSIONS ARE IN MILLIMETERS SURFACE FINISH: TOLERANCES: LINEAR: ANGULAR:	t-Global Technology		DO NOT SCALE DRAWING	REVISION
			LP0003/01-Material Ref.-Thickness(T mm.)	
			Ordering No. LP0003/01-L37-3F-0.25-2A	
	NAME	DATE	Material	TITLE:
DRAWN	L. Simpson	16th July 2012	t-Global Thermal Material L37-3F Thickness T = 0.25mm.	LUMI - PAD for LED Configuration
CHK'D				
APPV'D				
MFG				
Used On:- LUXEON LXK8-PWxx-0004			DWG NO. LP0003/01-L37-3F-0.25-2A	A3
			WEIGHT:	SCALE: 5:1 / SHEET 1 OF 1