Chipsmall Limited consists of a professional team with an average of over 10 year of expertise in the distribution of electronic components. Based in Hongkong, we have already established firm and mutual-benefit business relationships with customers from,Europe,America and south Asia,supplying obsolete and hard-to-find components to meet their specific needs.

With the principle of “Quality Parts,Customers Priority,Honest Operation,and Considerate Service”,our business mainly focus on the distribution of electronic components. Line cards we deal with include Microchip,ALPS,ROHM,Xilinx,Pulse,ON,Everlight and Freescale. Main products comprise IC,Modules,Potentiometer,IC Socket,Relay,Connector.Our parts cover such applications as commercial,industrial, and automotives areas.

We are looking forward to setting up business relationship with you and hope to provide you with the best service and solution. Let us make a better world for our industry!

Contact us

Tel: +86-755-8981 8866 Fax: +86-755-8427 6832
Email & Skype: info@chipsmall.com Web: www.chipsmall.com
Address: A1208, Overseas Decoration Building, #122 Zhenhua RD., Futian, Shenzhen, China

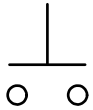

▲ CIRCUIT: SPST

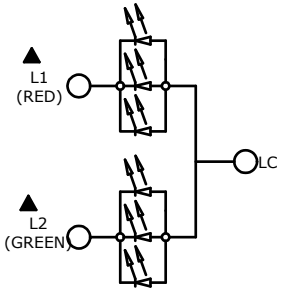

LED SCHEMATIC

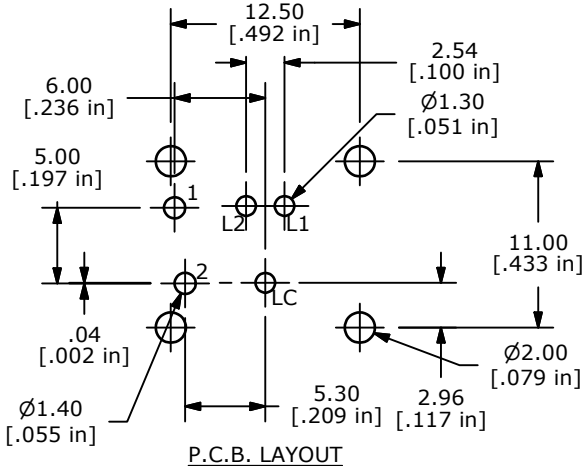

P.C.B. LAYOUT

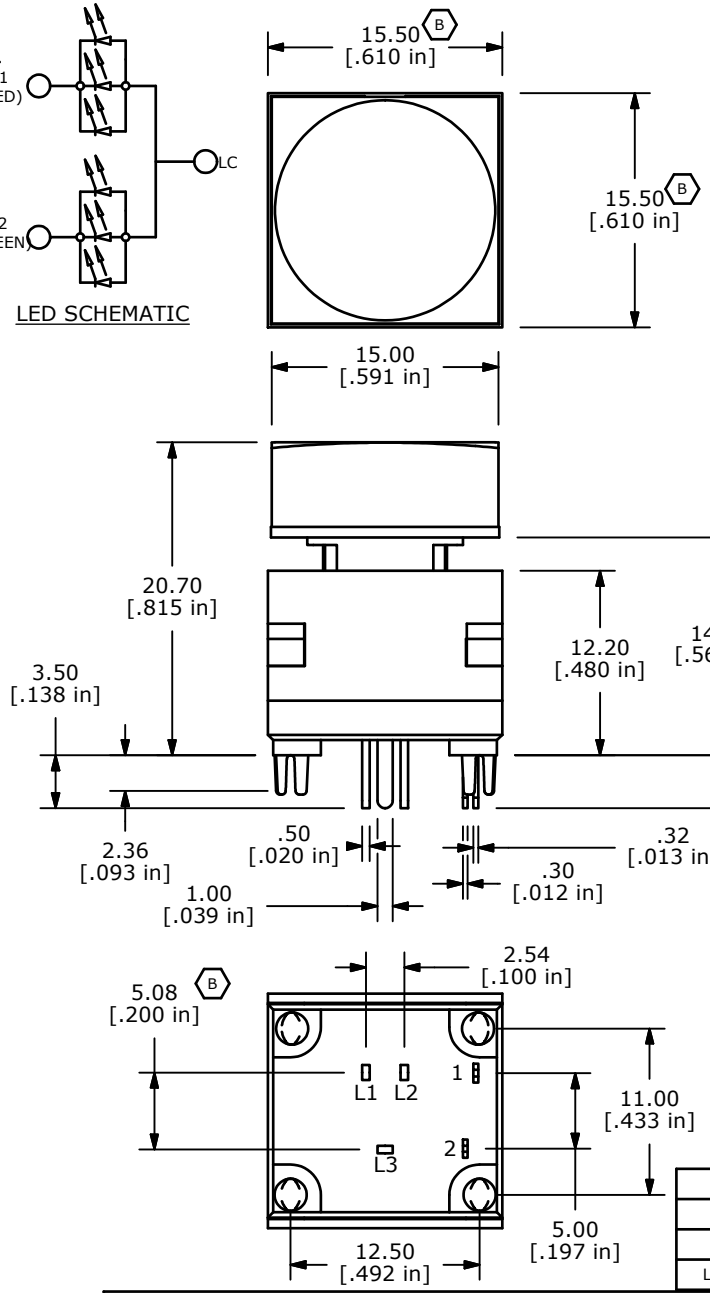

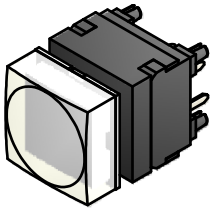

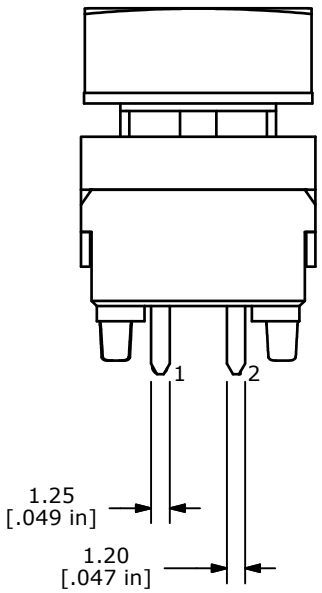

NOTES:
1. ALL DIMENSIONS IN MM [INCH]
2. GENERAL TOLERANCE: X.X=± 0.4
   X.XX=± 0.25
3. TERM. NOS. FOR REFERENCE ONLY.
4. RATING: 12VDC, 12mA; SPST
5. CONTACT MATERIAL: GOLD
6. CONTACT RESISTANCE: 50 MILLI-OHM MAX.
7. INSULATION RESISTANCE: 500VDC, 100 MEGA-OHM MIN.
▲8. OPERATING FORCE: 150± 100GF
9. OPERATING LIFE: 200,000 CYCLES
10. OPERATING TEMP: -20˚C TO +70˚C
▲11. LED COLORS: RED, GREEN
12. TRAVEL: 2.20mm±0.20
13. 2002/95/EC (ROHS) COMPLIANT
14. ▲DENOTES CRITICAL PARAMETER.

▲ LED SPECS	UNITS	RED	GREEN
FORWARD CURRENT	mA	25	25
FORWARD VOLTAGE @20mA	VDC	1.95	2.0
LUMINOUS INTENSITY @ 10mA	mcd	77	412

REV	PCR NO	DESCRIPTION	DATE	BY
B	19589	CHANGED DIMS: was 15.6 & 5.07	1/14/11	BGL
A	18147	New Release	6/18/08	rc

THE INFORMATION CONTAINED IN THIS DOCUMENT IS PROPRIETARY TO E-SWITCH AND IS NOT TO BE COPIED OR TRANSFERRED

E-SWITCH™

TITLE LP6OA1ASRG

SCALE	DATE	DR	DWG	REV
2=1	6/18/2008	rc	B220001	B