Chipsmall Limited consists of a professional team with an average of over 10 year of expertise in the distribution of electronic components. Based in Hongkong, we have already established firm and mutual-benefit business relationships with customers from,Europe,America and south Asia,supplying obsolete and hard-to-find components to meet their specific needs.

With the principle of “Quality Parts,Customers Priority,Honest Operation,and Considerate Service”,our business mainly focus on the distribution of electronic components. Line cards we deal with include Microchip,ALPS,ROHM,Xilinx,Pulse,ON,Everlight and Freescale. Main products comprise IC,Modules,Potentiometer,IC Socket,Relay,Connector.Our parts cover such applications as commercial,industrial, and automotives areas.

We are looking forward to setting up business relationship with you and hope to provide you with the best service and solution. Let us make a better world for our industry!

Contact us

Tel: +86-755-8981 8866 Fax: +86-755-8427 6832
Email & Skype: info@chipsmall.com Web: www.chipsmall.com
Address: A1208, Overseas Decoration Building, #122 Zhenhua RD., Futian, Shenzhen, China

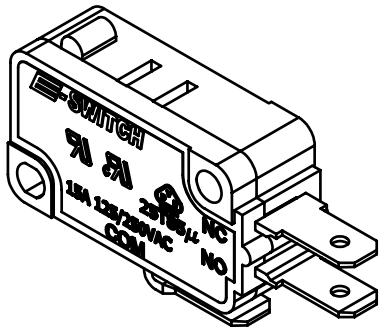

ISOMETRIC

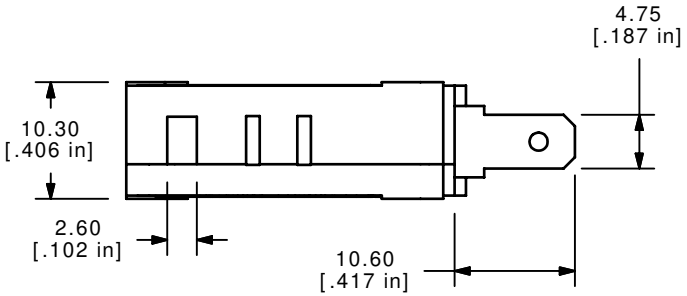

▲ O.P. (MM)	P.T. (MM)
14.7 ±0.5	2.0 MAX.

O.P. = OPERATING POINT
P.T. = PRE-TRAVEL

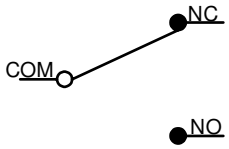

CIRCUIT: SPDT

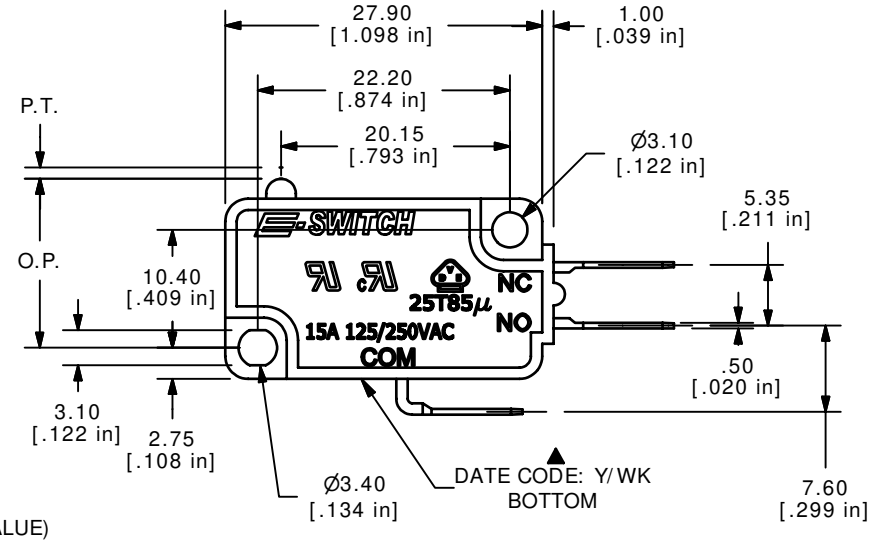

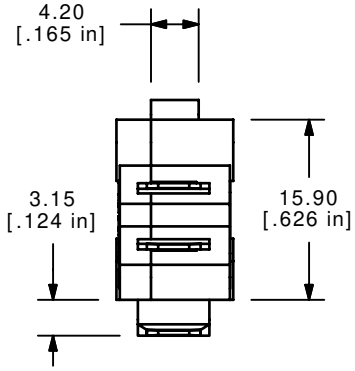

NOTES:
1. ALL DIMENSIONS IN MM [INCH]
2. GENERAL TOLERANCE: X.X=±0.4
   X.XX=±0.25
3. RATING: 15A @125/250VAC UL, CUL, VDE APPROVED
▲4. OPERATING FORCE: 160±40 GRAMS
5. OPERATING TEMP: -25˚C TO 85˚C
6. ELECTRICAL LIFE: 50,000 CYCLES MIN.
7. MECHANICAL LIFE: 1,000,000 CYCLES TYP.
8. INSULATION RESISTANCE: 100 MEGA-OHMS MIN.
9. DIELECTRIC STRENGTH: 1500VAC 1 MINUTE (INITAL VALUE)
10. CONTACT RESISTANCE: 100 MILLI -OHMS MAX.
▲11. DATE CODE TO BE STAMPED: Y=YEAR/WK=WEEK
12. ▲DENOTES CRITICAL PARAMETER.
13. 2002/95/EC (ROHS) COMPLIANT

REV	PCR NO	DESCRIPTION	DATE	BY
F	16967	FIXED DATE CODE	2/6/07	TN
E	15603	CHANGES NOTED	12/13/05	PH
D	15058	FIXED DIMMENSION	7/1/05	JB
C	14969	CHANGED DIMMENSIONS AND NOTES	6/1/05	JB

THE INFORMATION CONTAINED IN THIS DOCUMENT IS PROPRIETARY TO E-SWITCH AND IS NOT TO BE COPIED OR TRANSFERRED

E-SWITCH®

TITLE LS0851500F160C1A

SCALE	DATE	DR	DWG	REV
1.5:1	2/6/2007	TN	Q950000	F