Chipsmall Limited consists of a professional team with an average of over 10 year of expertise in the distribution of electronic components. Based in Hongkong, we have already established firm and mutual-benefit business relationships with customers from,Europe,America and south Asia,supplying obsolete and hard-to-find components to meet their specific needs.

With the principle of “Quality Parts,Customers Priority,Honest Operation,and Considerate Service”,our business mainly focus on the distribution of electronic components. Line cards we deal with include Microchip,ALPS,ROHM,Xilinx,Pulse,ON,Everlight and Freescale. Main products comprise IC,Modules,Potentiometer,IC Socket,Relay,Connector.Our parts cover such applications as commercial,industrial, and automotives areas.

We are looking forward to setting up business relationship with you and hope to provide you with the best service and solution. Let us make a better world for our industry!

Contact us

Tel: +86-755-8981 8866 Fax: +86-755-8427 6832
Email & Skype: info@chipsmall.com Web: www.chipsmall.com
Address: A1208, Overseas Decoration Building, #122 Zhenhua RD., Futian, Shenzhen, China

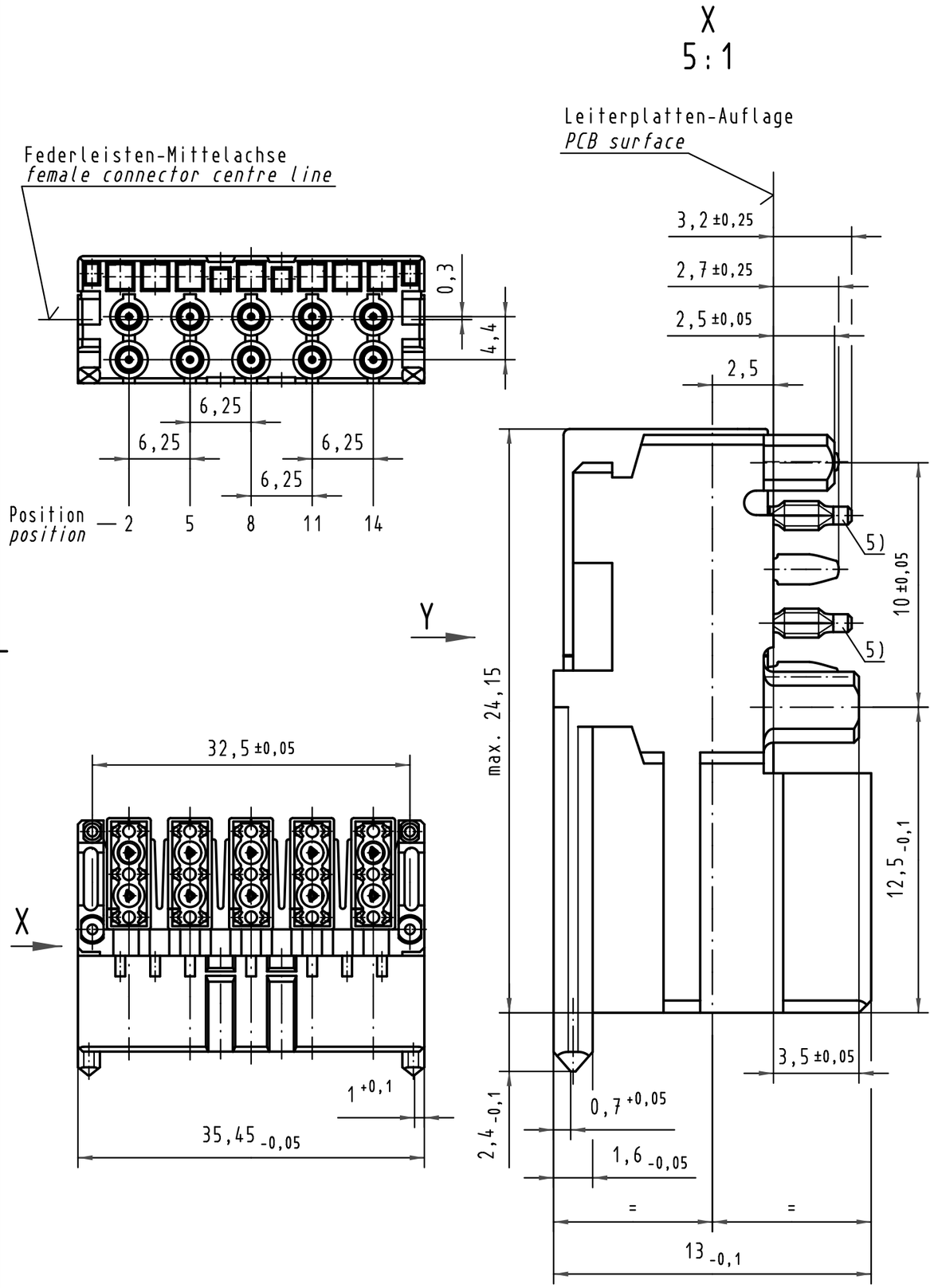

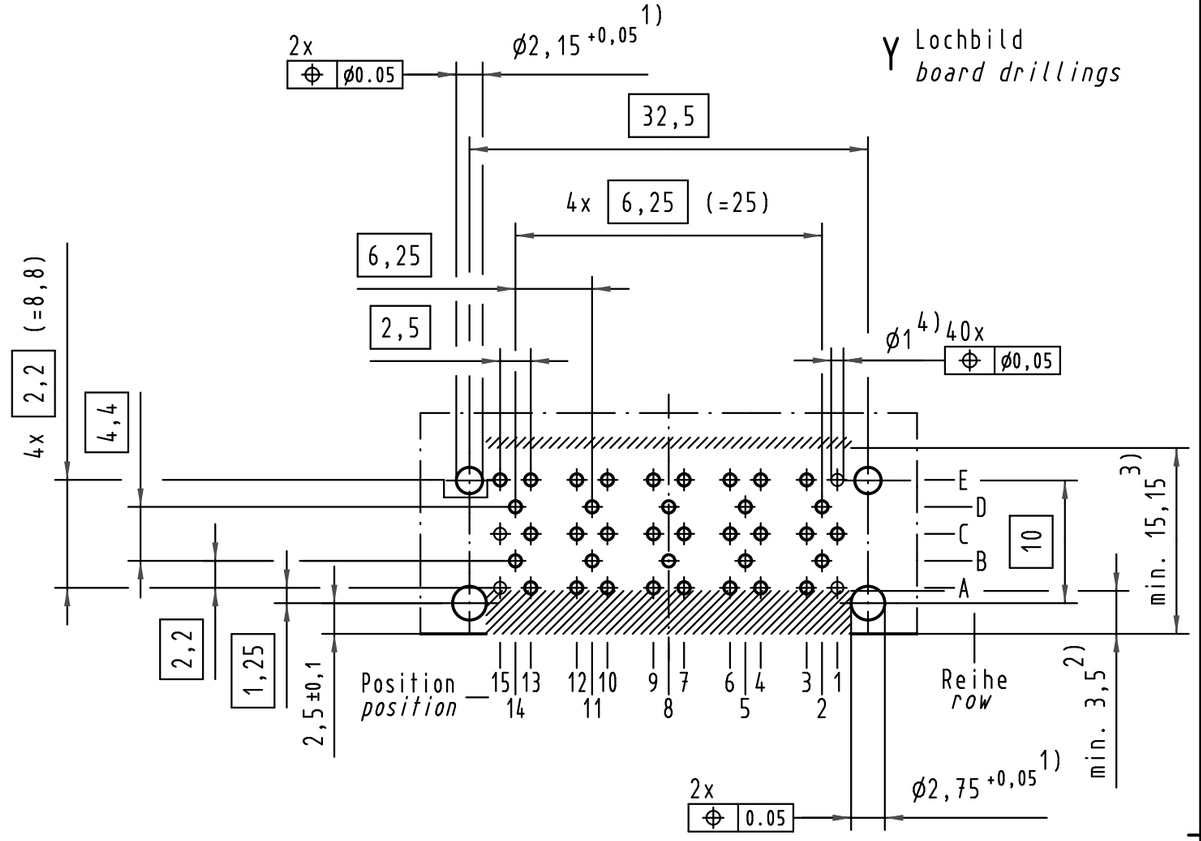

Reihe B,D ; Position 2,5,8,11,14 für Signalleitung
row B,D ; position 2,5,8,11,14 for signal-line
Reihe A,C,E ; Position 1,3,4,6,7,9,10,12,13,15 für Masseleitung
row A,C,E ; position 1,3,4,6,7,9,10,12,13,15 for ground-line

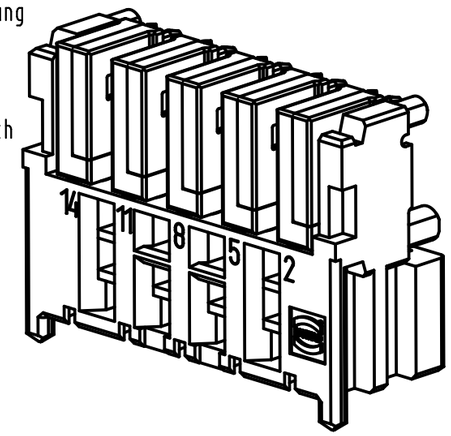

5) Einpreßzone in beliebiger Winkellage zur Längsachse möglich
5) press-in-zone in any angular position related to it's longitudinal axis possible
4) Für Einpreßverbindung DIN 41611-5-EE 1.0-AC
4) for press-in connection DIN 41611-5-EE 1.0-AC
3) Bauteilegrenze (gilt für beide Leiterplattenseiten)
3) limit area of components (valid for both pcb-sides)
2) Frei von Leiterbahnen, ausgenommen Anschlußaugen
2) no tracks, except solder eyes
1) Löcher nicht metallisiert
1) non-metallized drillings

All Dimensions in mm
Original Size DIN A 3

Techn. Character.

Nicht tolerierte Maße/*Free size tolerances*

Mod.	Dat.	Name		Dat.	Name	Maßstab/*Scale*
			Detail.	29.07.96	Rie.	2:1
			Insp.	29.07.96	Pa.	5:1
34650	08.02.08	Hage.	Stand.			
23838	20.03.98	Rie.				
19542						

HARTING Electronics GmbH & Co. KG
D-32339 ESPELKAMP

Mini-Koax-Modul,1.5SU-gewinkelt
10x50 Ohm,(5 Doppelk.),Einpreßtechnik
mini-coax-module,1.5SU-right angled
10x50 Ohm,(5 twin-con.),press-in

TB 07 31 100 0021

Blatt/*page*

Sub.

Alle Rechte vorbehalten/ *All rights reserved*