Chipsmall Limited consists of a professional team with an average of over 10 year of expertise in the distribution of electronic components. Based in Hongkong, we have already established firm and mutual-benefit business relationships with customers from,Europe,America and south Asia,supplying obsolete and hard-to-find components to meet their specific needs.

With the principle of “Quality Parts,Customers Priority,Honest Operation,and Considerate Service”,our business mainly focus on the distribution of electronic components. Line cards we deal with include Microchip,ALPS,ROHM,Xilinx,Pulse,ON,Everlight and Freescale. Main products comprise IC,Modules,Potentiometer,IC Socket,Relay,Connector.Our parts cover such applications as commercial,industrial, and automotives areas.

We are looking forward to setting up business relationship with you and hope to provide you with the best service and solution. Let us make a better world for our industry!

Contact us

Tel: +86-755-8981 8866 Fax: +86-755-8427 6832
Email & Skype: info@chipsmall.com Web: www.chipsmall.com
Address: A1208, Overseas Decoration Building, #122 Zhenhua RD., Futian, Shenzhen, China

FEATURES

* High speed transmission （16 Mbps , NRZ code ）
* TTL compatible
* Same package as fiber optic transmiting module LTDL-TX12S01B

APPLICATIONS

* Digital audio system
* CD, MD & DVD players

PACKAGE DIMENSIONS

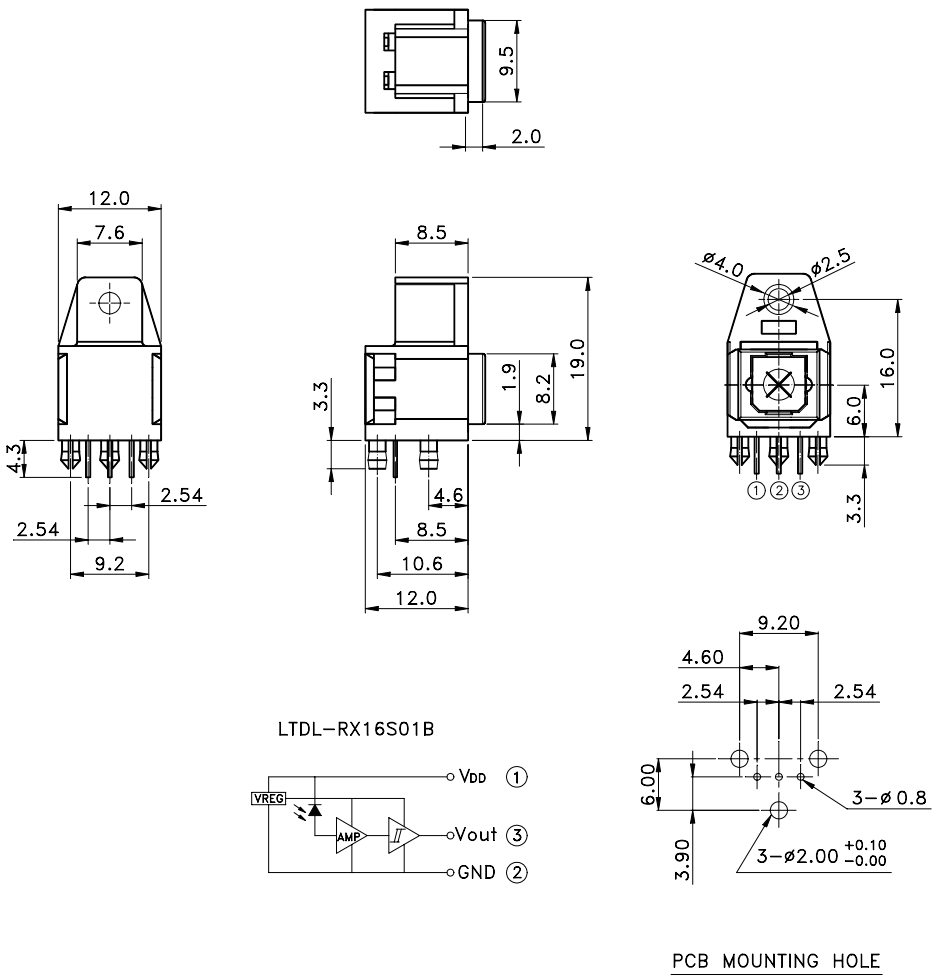

NOTES:
1. All dimensions are in millimeters (inches).
2. Tolerance is ±0.3 mm (.012") unless otherwise noted.
3. In the absence of comfrimation by device data sheets. LITE-ON takes no respondibility for any defects that may occur in equipment using any devices shown in catalogs, data book. etc. Contant LITE-ON in order to obtain the latest device data sheets before using any LITE-ON device.

ELECTRO - OPTICAL CHARACTERISTICS

ABSOLUTE MAXIMUM RATINGS AT Ta=25℃

PARAMETER	MAXIMUM RATING	UNIT
Supply Voltage (V_{DD})	-0.5 ~ +6.0	V
Output Voltage (V_O)	-0.5 ~ V_{DD} + 0.3	V
Operating Temperature Range	-20℃ to + 70℃	
Storage Temperature Range	-30℃ to + 80℃	
Lead Soldering Temperature [1.6mm(.063") From Body]	260℃ for 5 Seconds	

ELECTRICAL OPTICAL CHARACTERISTICS AT Ta=25℃

PARAMETER	SYMBOL	MIN.	TYP.	MAX.	UNIT	TEST CONDITION
Data Rate	Ts	0.1	-	16	Mbps	NRZ signal
Operating Voltage	V_{DD}	4.75	-	5.25	V	
Peak Sensitivity Wavelength	λ_{Peak}	-	650	-	nm	
Input Sensitivity	Pi	-24	-	-14	dBm	
Dissipation current	I_{DD}	-	4	6	mA	*1
High level output voltage	V_{OH}	2.4	4.8	-	V	*1
Low level output voltage	V_{OL}	-	0.2	0.4	V	*1
"Low→High"propagation delay time	t_{PLH}	-	-	166	ns	*1
"High→Low"propagation delay time	t_{PHL}	-	-	155	ns	
Pulse width distortion	Δt_W	-18	-	+18	ns	
Jitter	Δ tj	-	1	5	ns	*1
Rise Time	t_r	-	8	20	ns	*1
Fall Time	t_f	-	8	20	ns	*1

***1 Setup of Measuring System**

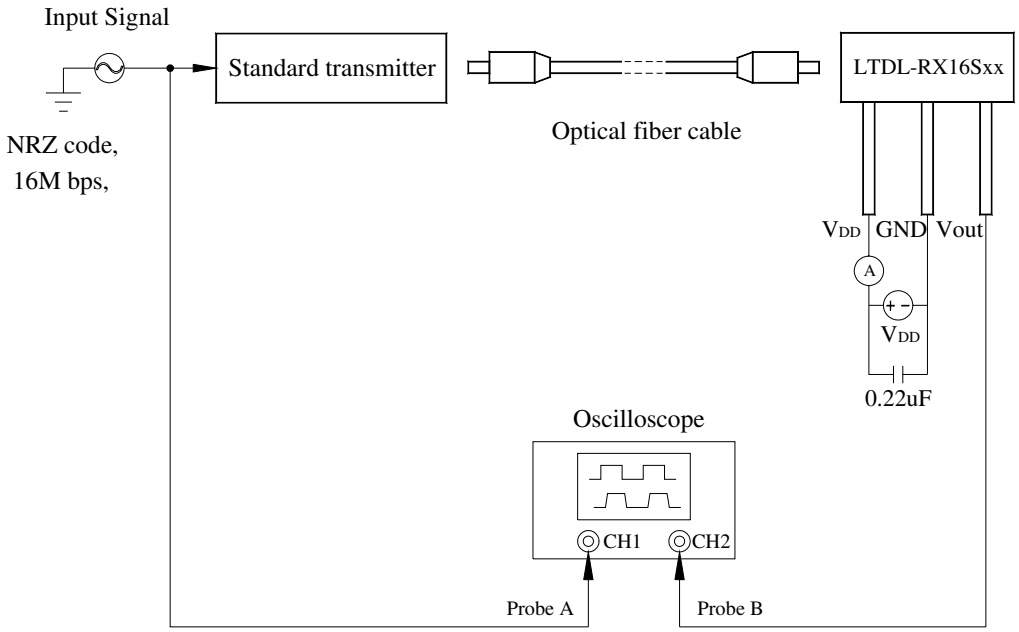

Note：

（1） V_{DD} = + 5.0 V ± 0.05V
（2） Input signal：16M bps, NRZ code, tr, tf ≦ 5ns
（3） Characteristics of standard transmitter are according to another sheet.
（4） The SONY POC-10（POF, 1m）or its equivalent fiber optic cable should be used.
（5） The Tektronix TDS380P or its equivalent oscilloscope should be used.
（6） The probe B for the oscilloscope must be more than 1MΩ and less than 10pF.
（7） When measuring delay time, use same type and length of probe A and B.
（8） It measures in the condition where did fiber optic cable straight, but the curve of the range within contented.

Item	Measuring Method
I_{DD}	Measured on the ammeter
V_{OH}	Measured on the oscilloscope
V_{OL}	Measured on the oscilloscope
t_{PLH}	Measured on the oscilloscope
t_{PHL}	Measured on the oscilloscope
Δt_W	Measured on the oscilloscope
t_r	Measured on the oscilloscope
t_f	Measured on the oscilloscope
Δ tj	Measured on the oscilloscope

Rise and Fall Times and Pulse Width Distortion

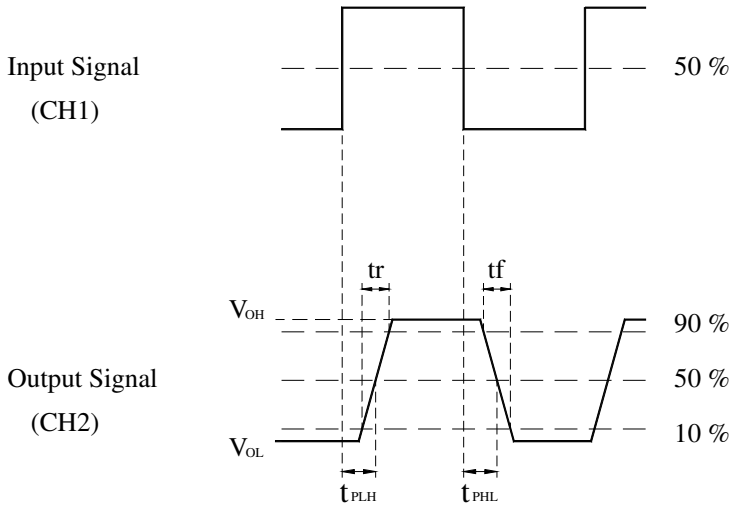

Pulse Width Distortion= $\triangle tw = t_{PHL} - t_{PLH}$

Jitter

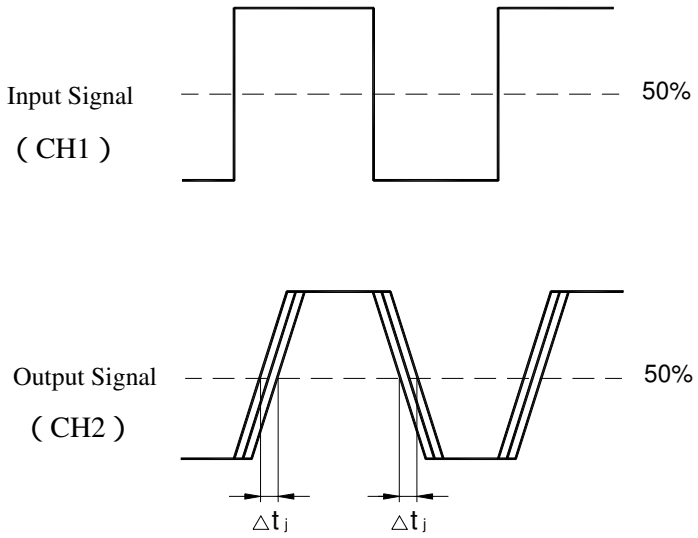

Notice

- The circuit application examples in this publication are provided to explain representative applications of LITE-ON devices and are not intended to guarantee any circuit design or license any intellectual property rights. LITE-ON takes no responsibility for any problems related to any intellectual property right of a third party resulting from the use of LITE-ON devices.
- Contact LITE-ON in order to obtain the latest device data sheets before using any LITE-ON device. LITE-ON reserves the right to make changes in the specifications, characteristics, data, materials, structure, and other contents described herein at any time without notice in order to improve design or reliability. Manufacturing locations are also subject to change without notice.
- Observe the following points when using any devices in this publication. LITE-ON takes no responsibility for damage caused by improper use of the devices which does not meet the conditions and absolute maximum ratings to be used specified in the relevant data sheet nor meet the following conditions：

(i) The devices in this publication are designed for use in general electronic equipment designs such as：
--- Personal computers
--- Office automation equipment
--- Telecommunication equipment【terminal】
--- Test and measurement equipment
--- Industrial control
--- Audio visual equipment
--- Consumer electronics

(ii) Measure such as fail-safe function and redundant design should be taken to ensure reliability and safety when LITE-ON device are used for or in connection with equipment that requires higher reliability such as：
--- Transportation control and safety equipment（i.e., aircraft, train, automobiles, ect.）
--- Traffic signals
--- Gas leakage sensor breakers
--- Alarm equipment
--- Various safety devices, etc.

(iii) LITE-ON devices shall not be used for or in connection with equipment that requires an extremely high level of reliability and safety such as：
--- Space applications
--- Telecommunication equipment（trunk lines）
--- Nuclear power control equipment
--- Medical and other life support equipment（e.g., scuba）

- If the LITE-ON devices listed in this publication fall within the scope of strategic products described in the Foreign Exchange and Foreign Trade Law of Republic of China , it is necessary to obtain approval to export such LITE-ON devices.
-
- Contact and consult with a LITE-ON representative if there are any questions about the contents of this publication.