Chipsmall Limited consists of a professional team with an average of over 10 year of expertise in the distribution of electronic components. Based in Hongkong, we have already established firm and mutual-benefit business relationships with customers from,Europe,America and south Asia,supplying obsolete and hard-to-find components to meet their specific needs.

With the principle of “Quality Parts,Customers Priority,Honest Operation,and Considerate Service”,our business mainly focus on the distribution of electronic components. Line cards we deal with include Microchip,ALPS,ROHM,Xilinx,Pulse,ON,Everlight and Freescale. Main products comprise IC,Modules,Potentiometer,IC Socket,Relay,Connector.Our parts cover such applications as commercial,industrial, and automotives areas.

We are looking forward to setting up business relationship with you and hope to provide you with the best service and solution. Let us make a better world for our industry!

Contact us

Tel: +86-755-8981 8866 Fax: +86-755-8427 6832
Email & Skype: info@chipsmall.com Web: www.chipsmall.com
Address: A1208, Overseas Decoration Building, #122 Zhenhua RD., Futian, Shenzhen, China

Features

* High luminous intensity output.
* Low power consumption.
* High efficiency.
* Versatile mounting on P.C. board or panel.
* I.C. Compatible/low current requirements.
* Popular T-1 3/4 diameter.

Package Dimensions

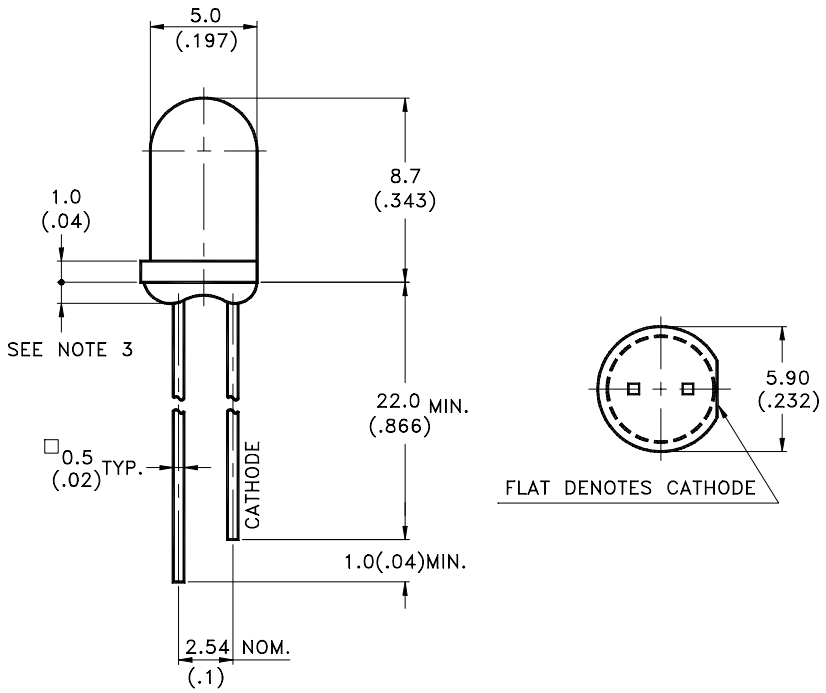

Part No.	Lens	Source Color
LTL2P3KSK	Water Clear	AlInGaP Yellow

Notes:

1. All dimensions are in millimeters (inches).
2. Tolerance is ± 0.25mm(.010") unless otherwise noted.
3. Protruded resin under flange is 1.0mm(.04") max.
4. Lead spacing is measured where the leads emerge from the package.
5. Specifications are subject to change without notice.

Absolute Maximum Ratings at T_A=25℃

Parameter	Maximum Rating	Unit
Power Dissipation	75	mW
Peak Forward Current (1/10 Duty Cycle, 0.1ms Pulse Width)	60	mA
Continuous Forward Current	30	mA
Derating Linear From 50℃	0.4	mA/℃
Reverse Voltage	5	V
Operating Temperature Range	-40℃ to + 100℃	
Storage Temperature Range	-55℃ to + 100℃	
Lead Soldering Temperature [1.6mm(.063") From Body]	260℃ for 5 Seconds	

Electrical / Optical Characteristics at T_A=25℃

Parameter	Symbol	Min.	Typ.	Max.	Unit	Test Condition
Luminous Intensity	I_V	320	1000		mcd	I_F = 20mA Note 1
Viewing Angle	$2\theta_{1/2}$		22		deg	Note 2 (Fig.5)
Peak Emission Wavelength	λ_P		588		nm	Measurement @Peak (Fig.1)
Dominant Wavelength	λ_d		587		nm	Note 4
Spectral Line Half-Width	$\Delta\lambda$		15		nm	
Forward Voltage	V_F		2.05	2.4	V	I_F = 20mA
Reverse Current	I_R			100	μA	V_R = 5V
Capacitance	C		40		pF	V_F= 0 , f = 1MHz

NOTE: 1. Luminous intensity is measured with a light sensor and filter combination that approximates the CIE eye-response curve.

2. $\theta_{1/2}$ is the off-axis angle at which the luminous intensity is half the axial luminous intensity.

3. Iv classification code is marked on each packing bag.

4. The dominant wavelength, λd is derived from the CIE chromaticity diagram and represents the single wavelength which defines the color of the device.

Typical Electrical / Optical Characteristics Curves

(25℃ Ambient Temperature Unless Otherwise Noted)

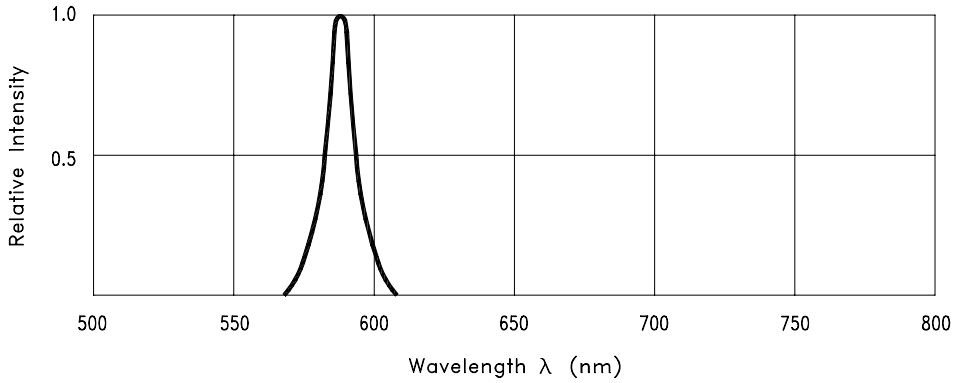

Fig.1 Relative Intensity vs. Wavelength

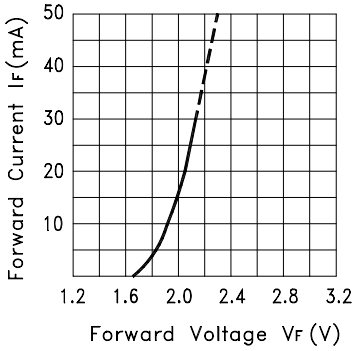

Fig.2 Forward Current vs. Forward Voltage

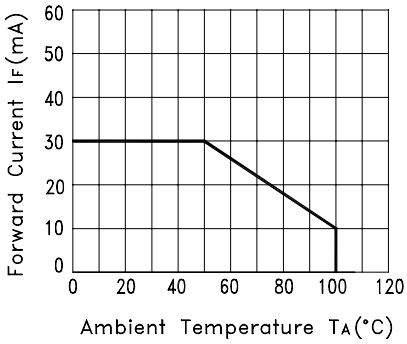

Fig.3 Forward Current Derating Curve

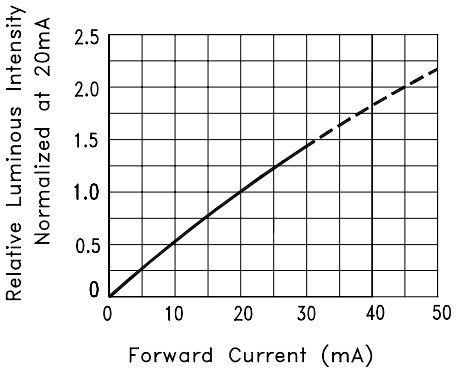

Fig.4 Relative Luminous Intensity vs. Forward Current

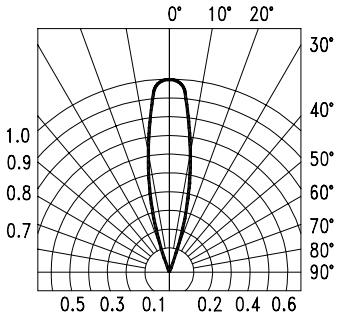

Fig.5 Spatial Distribution