Chipsmall Limited consists of a professional team with an average of over 10 year of expertise in the distribution of electronic components. Based in Hongkong, we have already established firm and mutual-benefit business relationships with customers from,Europe,America and south Asia,supplying obsolete and hard-to-find components to meet their specific needs.

With the principle of “Quality Parts,Customers Priority,Honest Operation,and Considerate Service”,our business mainly focus on the distribution of electronic components. Line cards we deal with include Microchip,ALPS,ROHM,Xilinx,Pulse,ON,Everlight and Freescale. Main products comprise IC,Modules,Potentiometer,IC Socket,Relay,Connector.Our parts cover such applications as commercial,industrial, and automotives areas.

We are looking forward to setting up business relationship with you and hope to provide you with the best service and solution. Let us make a better world for our industry!

Chipsmall
深圳市津利帝科技有限公司
Geelead Technology Limited
Chipsmall
采购部

Contact us

Tel: +86-755-8981 8866 Fax: +86-755-8427 6832
Email & Skype: info@chipsmall.com Web: www.chipsmall.com
Address: A1208, Overseas Decoration Building, #122 Zhenhua RD., Futian, Shenzhen, China

Microsemi™®

PanelMatch™ "A Series" LXMG1618A-03-2x

3.3V 2.2W CCFL Programmable Inverter Module

PRODUCTION DATASHEET

DESCRIPTION

The LXMG1618A-03-2x™ is a Single Output 2.2W Direct Drive™ CCFL (Cold Cathode Fluorescent Lamp) Inverter Module designed for driving LCD backlight lamps. It is ideal for driving typically 3.9” to 6.4” panels.

The maximum output current is externally programmable over a range of 3.5 to 5mA in 0.5mA steps (PanelMatch) to allow the inverter to properly match to a wide array of LCD panel lamp current specifications. The modules include a dimming input that permits brightness control from a DC voltage source, a PWM signal or an external potentiometer.

LXMG1618A modules unlike the LXMG1617A series do not provide wide range ‘burst’ mode dimming, rather dimming is provided by amplitude control of the output current waveform, and this limits the potential dim range to typically less than 5:1.

The module converts a DC voltage from the system battery, or AC adapter directly to high frequency, high-voltage waveform required to ignite and operate CCFL lamps. A 5V input inverter is also available (LXMG1618A-05-2x).

The LXMG1618A modules contain the newer highly integrated LX1691B CCFL backlight controller to provide a wider temperature range (-30°C to 80°C) compared to the existing solutions offered by Microsemi.

Other benefits of the inverter’s topology include stable fixed-frequency operation, secondary-side strike voltage regulation and both open/shorted lamp protection with fault timeout.

The new LXMG1618A (“A Series”) modules are designed therefore as a higher performance near drop-in replacement (see BRITE minimum input) for those customers and applications currently using the LXMG1618 inverters.

IMPORTANT: For the most current data, consult *MICROSEMI*’s website: http://www.microsemi.com
Protected By U.S. Patents: 5,923,129; 5,930,121; 6,198,234; Patents Pending

KEY FEATURES

- Externally Programmable Maximum Output Current
- Easy to Use Brightness Control
- Output Short-Circuit Protection and Automatic Strike-Voltage Regulation and Timeout
- Analog Current Amplitude Dimming Method
- Fixed Frequency Operation
- Rated From -30°C to 80°C
- UL60950 E175910
- RoHS Compliant

APPLICATIONS

- Medical Instrument Displays
- Portable Instrumentation (GPS, etc.)
- Industrial Display Controls

BENEFITS

- Programmable Output Current Allows Inverter to Mate with a Wide Variety of LCD Panel’s Specifications
- Output Open Circuit Voltage Regulation Minimizes Corona Discharge For High Reliability

PRODUCT HIGHLIGHT

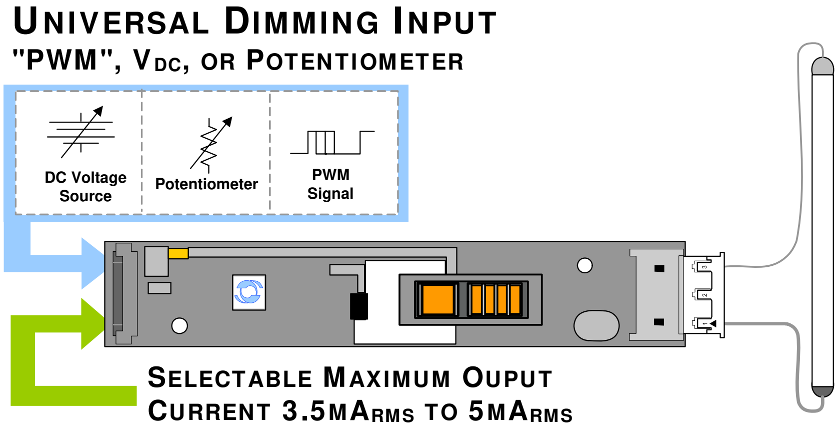
UNIVERSAL DIMMING INPUT
"PWM", VDC, OR POTENTIOMETER
DC Voltage Source
Potentiometer
PWM Signal
SELECTABLE MAXIMUM OUPUT CURRENT 3.5MARMS TO 5MARMS

PACKAGE ORDER INFO

PART NUMBER	OUTPUT CONNECTOR	INVERTER MATES DIRECTLY TO PANEL CONNECTORS
LXMG1618A-03-21	JST SM02(8.0)B-BHS-1-TB (LF)(SN) or Yeon Ho 20015WR-05A00 or equivalent	JST BHR-03VS-1
LXMG1618A-03-22	JST SM02B-BHSS-1-TB (LF)(SN) or Yeon Ho 35001WR-02A00 or equivalent	JST BHSR-02VS-1

Rev. 1.1, 2009-11-03

ABSOLUTE MAXIMUM RATINGS

Input Signal Voltage (V_{IN})	-0.3V to 5V
Input Power	3.0W
Output Voltage, no load	Internally Limited to 1300V_{RMS}
Output Current	6mA_{RMS} (Internally Limited)
Output Power	2.3W
Input Signal Voltage ($\overline{SLEEP}$ Input)	-0.3V to 5V
Input Signal Voltage (BRITE)	-0.3V to 5V
Ambient Operating Temperature, zero airflow	-30°C to 80°C
Storage Temperature Range	-40°C to 85°C

Exceeding these ratings could cause damage to the device. All voltages are with respect to Ground. Currents are positive into, negative out of specified terminal.

RECOMMENDED OPERATING CONDITIONS (R.C.)

This module has been designed to operate over a wide range of input and output conditions. However, best efficiency and performance will be obtained if the module is operated under the condition listed in the 'R.C.' column. Min. and Max. columns indicate values beyond which the inverter, although operational, may not function optimally.

Parameter	Symbol	Recommended Operating Conditions			Units
		Min	R.C.	Max	
Input Supply Voltage Range (Fully Regulated Lamp Current)	V_{IN}	3	3.3	3.6	V
Input Supply Voltage Range (Functional)		3		4.2	
Output Power	P_O			2.2	W
Linear BRITE Control Input Voltage Range[1]	V_{BRT_ADJ}	0		2.0	V
Lamp Operating Voltage	V_{LAMP}	325	380	435*	V_{RMS}
Lamp Current (Full Brightness)	I_{OLAMP}	3.5		5.0	mA_{RMS}
Operating Ambient Temperature Range	T_A	-30		80	°C

[1] The BRITE minimum input voltage level is 0V, whereas it is 0.65V in the original LXMG1618-03-2x inverter, see application info on page 5. The minimum V_{BRT_ADJ} voltage depends on the panel characteristics and minimum lamp current specification, depending on the panel it can vary from 0V to 0.5V

*Total output power must not exceed 2.2W. Higher voltage lamps may require maximum output current to be set lower than 5mA_{RMS}

ELECTRICAL CHARACTERISTICS

The following specifications apply over the recommended operating condition and ambient temperature of 0°C to 60°C except where otherwise noted.

Parameter	Symbol	Test Conditions	LXMG1618A-03-2x			Units
			Min	Typ	Max	
OUTPUT PIN CHARACTERISTICS						
Full Bright Lamp Current	$I_{L(MAX)}$	$V_{BRT\_ADJ} \geq 2.0V$, $\overline{SLEEP} \geq 2.0V$, $V_{IN} = 3.3V$ I_{SET1} = Ground, I_{SET2} = Ground	3.0	3.5	4.0	mA_{RMS}
Full Bright Lamp Current	$I_{L(MAX)}$	$V_{BRT\_ADJ} \geq 2.0V$, $\overline{SLEEP} \geq 2.0V$, $V_{IN} = 3.3V$ I_{SET1} = Ground, I_{SET2} = Open	3.5	4.0	4.5	mA_{RMS}
Full Bright Lamp Current	$I_{L(MAX)}$	$V_{BRT\_ADJ} \geq 2.0V$, $\overline{SLEEP} \geq 2.0V$, $V_{IN} = 3.3V$ I_{SET1} = Open, I_{SET2} = Ground	4.0	4.5	5.0	mA_{RMS}
Full Bright Lamp Current	$I_{L(MAX)}$	$V_{BRT\_ADJ} \geq 2.0V$, $\overline{SLEEP} \geq 2.0V$, $V_{IN} = 3.3V$ I_{SET1} = Open, I_{SET2} = Open	4.5	5	5.5	mA_{RMS}
Min. Average Lamp Current[2]	$I_{L(MIN)}$	$V_{BRT\_ADJ} = 0V$, $\overline{SLEEP} \geq 2.0V$, $V_{IN} = 3.3V$ $I_{SET1} = I_{SET2}$ = Ground		1.5		mA_{RMS}
Lamp Start Voltage	V_{LS}	-30°C < T_A < 80°C, V_{IN} > 3V	1000	1200		V_{RMS}
Operating Frequency	f_O	$V_{BRT\_ADJ} = 2V$, $\overline{SLEEP} \geq 2.0V$, $V_{IN} = 3.3V$	85	90	94	kHz

[2] The inverter is capable of a lower output current than may be recommended by the panel manufacturer. It is the user responsibility to set the minimum brightness (BRITE) input at or above the panel specification for minimum lamp current.

ELECTRICAL CHARACTERISTICS (CONTINUED)

The following specifications apply over the recommended operating condition and ambient temperature of 0°C to 60°C except where otherwise noted.

Parameter	Symbol	Test Conditions	LXMG1618A-03-2x			Units
			Min	Typ	Max	
BRITE INPUT						
Input Current	I_{BRT}	$V_{BRT\_ADJ} = 0V$		-9		µA
		$V_{BRT\_ADJ} = 3V$		0		µA
Minimum Input for Max. Lamp Current	V_{BRT_ADJ}	$I_{O(LAMP)}$ = Maximum Lamp Current		1.8	2.0	V
Maximum Input for Min. Lamp Current[3]	V_{BRT_ADJ}	$I_{O(LAMP)}$ = Minimum Lamp Current	0			V
Minimum PWM Input Frequency	F_{BRT_PWM}		2			kHz
SLEEP BAR INPUT						
RUN Mode	$V_{\overline{SLEEP}}$		2.0			V
SLEEP Mode	$V_{\overline{SLEEP}}$		-0.3		0.8	V
$SET_{1,2}$ INPUT						
$SET_{1,2}$ Low Threshold	V_L				0.4	V
Input Current	I_{SET}	$V_{SET} = 0V$		-300		µA
POWER CHARACTERISTICS						
Sleep Current	$I_{IN(MIN)}$	$V_{IN} = 3.3V$, $\overline{SLEEP} \leq 0.8V$		3	10	µA
Run Current	I_{RUN}	$V_{IN} = 3.3V$, $\overline{SLEEP} \geq 2.0V$, I_{SET1} = Open I_{SET2} = Ground, $V_{LAMP} = 380V_{RMS}$		690		mA
Run Current Ripple Voltage	I_{RIPPLE}	$V_{IN} = 3.3V$, $\overline{SLEEP} \geq 2.0V$, I_{SET1} = Open I_{SET2} = Ground, $V_{LAMP} = 380V_{RMS}$		400		mVpp
Efficiency	η	$V_{IN} = 3.3V$, $\overline{SLEEP} \geq 2.0V$, I_{SET1} = Open I_{SET2} = Ground, $V_{LAMP} = 380V_{RMS}$		75		%

[3] The BRITE minimum input voltage level is 0V, whereas it is 0.65V in the original LXMG1618-03-2x inverter.

FUNCTIONAL PIN DESCRIPTION

CONN	PIN	DESCRIPTION
CN1 (Molex 53261-0871 or equivalent) Mates with 51021-0800 housing, 50079-8100 pins. Mates with LX9501G input cable assembly		
CN1-1 CN1-2	V_{IN}	Main Input Power Supply ($3V \leq V_{IN} \leq 3.6V$)
CN1-3 CN1-4	GND	Power Supply Return
CN1-5	$\overline{SLEEP}$	ON/OFF Control. ($0V < \overline{SLEEP} \leq 0.8$ = OFF, $\overline{SLEEP} \geq 2.0V$ = ON)
CN1-6	BRITE	Brightness Control (0V to 2.0V). 2.0V gives maximum lamp current.
CN1-7	SET_1	SET_1 MSB Connecting this pin to ground decreases the output current ~ 1mA (see Table 1)
CN1-8	SET_2	SET_2 LSB Connecting this pin to ground decreases the output current ~ 0.5mA (see Table 1)
CN2 for LXMG1618A-03-21 and -22 (JST SM02(8.0)B-BHS-1-TB(LF)(SN) / Yeon Ho 20015WR-05A00 or SM02B-BHSS-1-TB(LF)(SN) / Yeon Ho 35001WR-02A00) or equivalent		
CN2-1	V_{HI}	High voltage connection to high side of lamp. Connect to lamp terminal with shortest lead length. **DO NOT** connect to Ground.
CN2-2	V_{LO}	Connection to low side of lamp. Connect to lamp terminal with longer lead length. **DO NOT** connect to Ground

TABLE 1

OUTPUT CURRENT SETTINGS

SET₁ (Pin 7)	SET₂ (Pin 8)	Nominal Output Current
Open	Open	5.0mA
Open	Ground	4.5mA
Ground	Open	4.0mA
Ground	Ground	3.5mA

* If driven by a logic signal it should be open collector or open drain only, not a voltage source.

PHYSICAL DIMENSIONS

LXMG1618A-03-2X

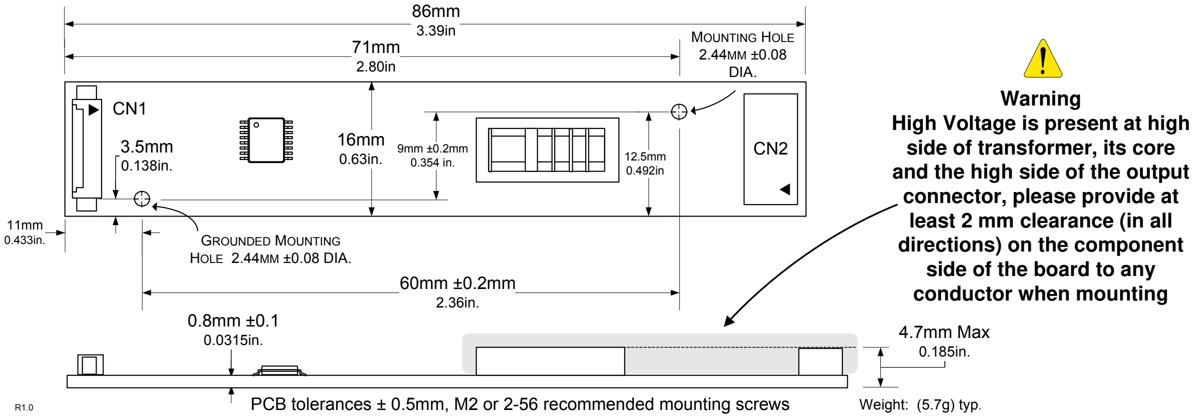
86mm
3.39in
71mm
2.80in
MOUNTING HOLE
2.44MM ±0.08
DIA.
CN1
3.5mm
0.138in.
16mm
0.63in.
9mm ±0.2mm
0.354 in.
12.5mm
0.492in
CN2
11mm
0.433in.
GROUNDED MOUNTING
HOLE 2.44MM ±0.08 DIA.
60mm ±0.2mm
2.36in.
0.8mm ±0.1
0.0315in.
4.7mm Max
0.185in.
R1.0

Warning
High Voltage is present at high side of transformer, its core and the high side of the output connector, please provide at least 2 mm clearance (in all directions) on the component side of the board to any conductor when mounting

PCB tolerances ± 0.5mm, M2 or 2-56 recommended mounting screws

Weight: (5.7g) typ.

All dimensions in millimeters, inches are for reference only.

SIMPLIFIED BLOCK DIAGRAM

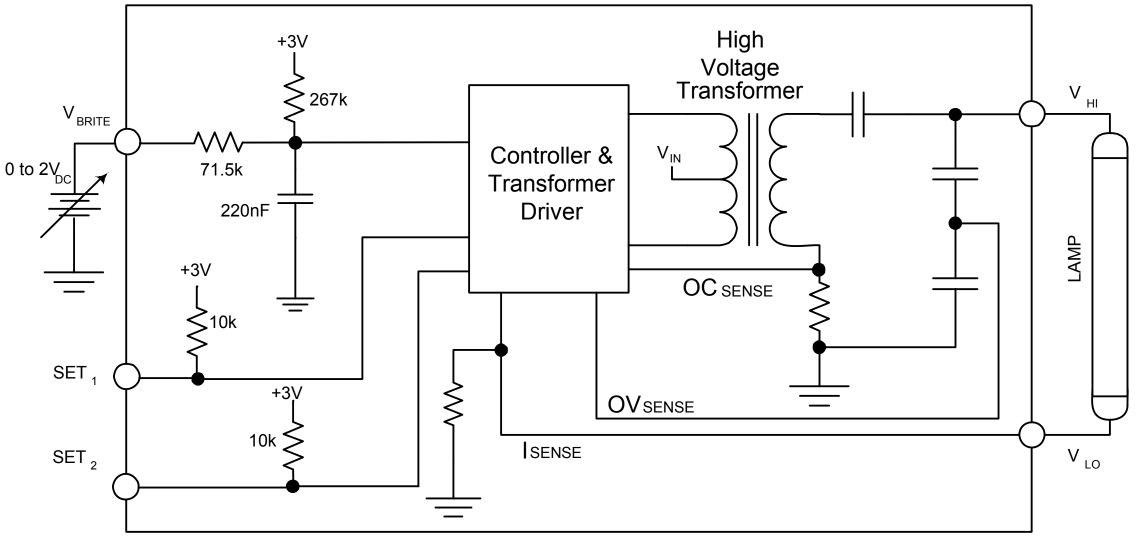
+3V
267k
High
Voltage
Transformer
V BRITE
71.5k
Controller &
Transformer
Driver
V IN
V HI
0 to 2V DC
220nF
LAMP
OC SENSE
+3V
10k
SET 1
+3V
10k
OV SENSE
SET 2
I SENSE
V LO

TYPICAL APPLICATION

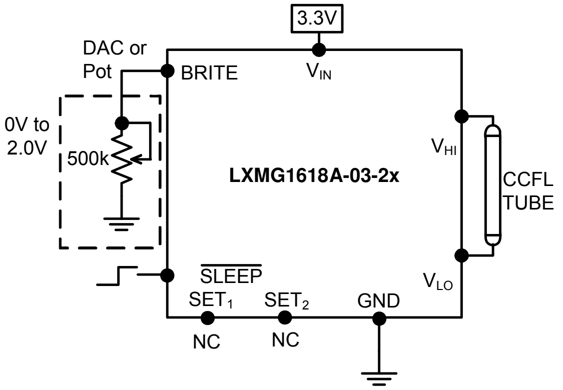

Figure 1 – Brightness Control
(Output current set to maximum)

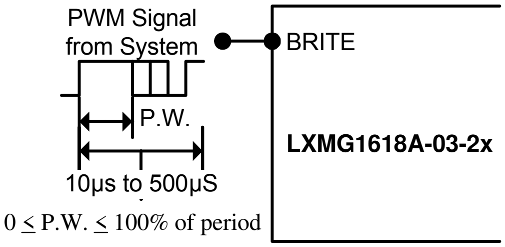

Figure 1A – PWM Brightness Control

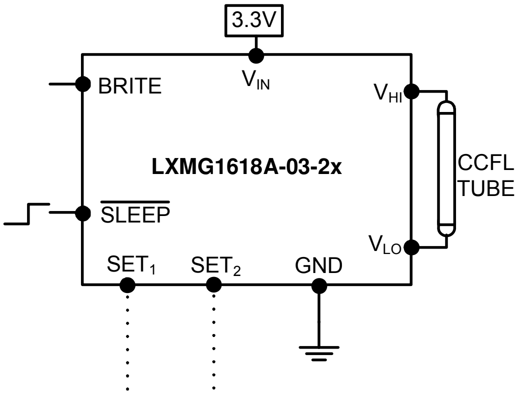

L	L	3.5mA_{RMS}
L	H	4.0mA_{RMS}
H	L	4.5mA_{RMS}
H	H	5.0mA_{RMS}

L=GND; H= Open

Figure 2 – Max Output Current
(SET_1 and SET_2 Inputs)

- The brightness control may be a voltage output DAC or other voltage source, a digital pot or 500K manual pot. The inverter contains effectively an internal 338k pull-up to 3V to bias the pot, if desired; add a resistor to set the lower threshold voltage above the absolute minimum dim level capability. A PWM logic level signal (figure 1A) may be used up to 5V; however the inverter will reach maximum current at less than 100% duty cycle. This can be calculated as approximately 2V divided by the logic high voltage level; with 3.3V logic level this corresponds to about 60% duty cycle for maximum lamp current.
- If you need to turn the inverter ON/OFF remotely, connect to TTL logic signal to the $\overline{SLEEP}$ input.
- Connect V_{HI} to high voltage wire from the lamp. Connect V_{LO} to the low voltage wire (wire with thinner insulation). Never connect V_{LO} to circuit ground as this will defeat lamp current regulation. If both lamp wires have heavy high voltage insulation, connect the longest wire to V_{LO}. This wire is typically white.
- Use the SET_1 and SET_2 (see Figure 2) inputs to select the desired maximum output current. Using these two pins in combination allows the inverter to match a wide variety of panels from different manufacturers. Generally the best lamp lifetime correlates with driving the CCFL at the manufacturer's nominal current setting. However the SET_1 and SET_2 inputs allow the user the flexibility to adjust the current to the maximum allowable output current to increase panel brightness at the expense of some reduced lamp life.
- Although the SET pins are designed such that just leaving them open or grounding them is all that is needed to set the output current, they can also be actively set. Using an open collector or open drain logic signal will allow you to reduce the lamp current for situations where greater dim range is required, as an example in nighttime situations. In conjunction with a light sensor or other timer the panel could be set to higher brightness (maximum output current) for daytime illumination and lower brightness (minimum or typical output current) at nighttime. Since the dim ratio is a factor of the peak output current, using this technique the effective dim ratio can be increased. Conversely, the SET inputs could be used to overdrive the lamp temporarily to facilitate faster lamp warm up at initial lamp turn on. Of course any possible degradation on lamp life from such practices is the user's responsibility since not all lamps are designed to be overdriven.
- The inverter has a built-in fault timeout function. If the output is open (lamp disconnected or broken) or shorted the inverter will attempt to strike the lamp up to about one second, after which (without success) the inverter will shutdown. Supply current draw in the shutdown mode is about 8mA. In order to restart the inverter it is necessary to toggle the sleep input or cycle the V_{IN} input supply.

NOTES

PRODUCTION DATA – Information contained in this document is proprietary to Microsemi and is current as of publication date. This document may not be modified in any way without the express written consent of Microsemi. Product processing does not necessarily include testing of all parameters. Microsemi reserves the right to change the configuration and performance of the product and to discontinue product at any time.