Chipsmall Limited consists of a professional team with an average of over 10 year of expertise in the distribution of electronic components. Based in Hongkong, we have already established firm and mutual-benefit business relationships with customers from,Europe,America and south Asia,supplying obsolete and hard-to-find components to meet their specific needs.

With the principle of “Quality Parts,Customers Priority,Honest Operation,and Considerate Service”,our business mainly focus on the distribution of electronic components. Line cards we deal with include Microchip,ALPS,ROHM,Xilinx,Pulse,ON,Everlight and Freescale. Main products comprise IC,Modules,Potentiometer,IC Socket,Relay,Connector.Our parts cover such applications as commercial,industrial, and automotives areas.

We are looking forward to setting up business relationship with you and hope to provide you with the best service and solution. Let us make a better world for our industry!

Contact us

Tel: +86-755-8981 8866 Fax: +86-755-8427 6832
Email & Skype: info@chipsmall.com Web: www.chipsmall.com
Address: A1208, Overseas Decoration Building, #122 Zhenhua RD., Futian, Shenzhen, China

NOTES:

1.0 ELECTRICAL SPECIFICATIONS:

1.1 FREQUENCY RANGE:
M3933/17–01 thru 06: DC to 4.5 GHz
M3933/17–07 thru 24: DC to 18.0 GHz

1.2 ATTENUATION ACCURACY: SEE TABLE

1.3 VSWR (MAX): (BOTH ENDS)
M3933/17–01 thru 06: 1.25:1
M3933/17–07 thru 24:
DC to 4.0 GHz: 1.15:1
4.0 to 8.0 GHz: 1.20:1
8.0 to 12.4 GHz: 1.25:1
12.4 to 18.0 GHz: 1.35:1

1.4 INPUT POWER:
POWER INPUT IS DERATED LINEARLY TO 0.5 WATTS AT +125°C.
M3933/17–01 thru 06: 4 WATTS AVG.
M3933/17–07 thru 24: 2 WATTS AVG.

1.5 PEAK POWER: 0.2 KILOWATTS
PEAK POWER FOR A DUTY CYCLE OF 5×10^{-4},
MAX. PULSE DURATAION OF 5 MICRSECONDS.

2.0 MARKING: MARK UNIT AS SHOWN
(REF.: INK–09208–27–XX)

3.0 DIMENSIONS IN PARENTHESIS ARE IN MILLIMETERS.

4.0 TESTING:
SCREENED PER ATP–07839–60–01
NON–SCREEN PER ATP–09210–60–01

M3933/17–XX MODEL NO.	(dB) ATTEN.	ATTEN. ACCURACY
–12	4	±0.4
–11	3	±0.4
–10	2	±0.4
–09	1	±0.4
–08	30	±0.9
–07	20	±0.6
–06	6	±0.4
–05	5	±0.4
–04	4	±0.4
–03	3	±0.4
–02	2	±0.4
–01	1	±0.3

M3933/17–XX MODEL NO.	(dB) ATTEN.	ATTEN. ACCURACY
–22	40	±1.0
–21	35	±0.9
–20	25	±0.8
–19	15	±0.5
–18	12	±0.5
–17	10	±0.5
–16	8	±.05
–15	7	±0.5
–14	6	±0.4
–13	5	±0.4

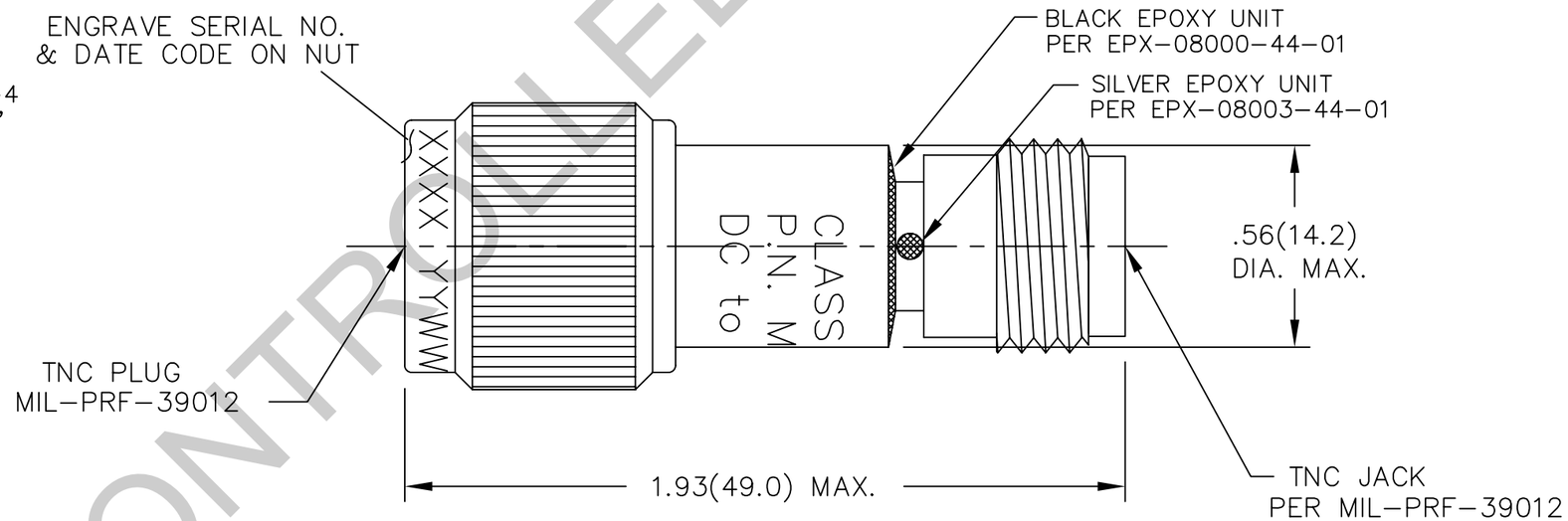

5.0 BAG MARKING:
MODEL M3933/17–XX (N or S)
ATTENUATOR FIXED COAXIAL LINE
YY WATTS AVERAGE INPUT POWER
FREQ. RANGE: DC–ZZ GHz
MFR 34078
LOT NO. _____
DATE CODE: YYWW

SEE MODEL NO. FOR LAST 3 DIGITS
SEE TABLE
SEE TABLE
YEAR & WEEK

REV.	DESCRIPTION	DATE
–	RELEASED	2/3/95
A	ECN 14461	5/4/95
B	ECN 19574	1/15/04
C	ECN 20764	3/10/06

UNLESS OTHERWISE NOTED DIMENSIONS ARE IN INCHES AND TOLERANCES ARE:
3 PLACE DECIMALS ±.005
2 PLACE DECIMALS ±.02
FRACTIONS ±1/64
PARALLELITY: T.I.R. _____
FLATNESS: T.I.R. _____
CONCENTRICITY: T.I.R. _____
ANGLES AND PERPENDICULARITY: ±1°

FSCM NO. 34078

MIDWEST MICROWAVE

NOTICE: The information contained in this drawing is proprietary and must not be used without the permission of Midwest Microwave

TITLE: ATTENUATOR

DRAWN/DATE	ENG./DATE	DRAWING NUMBER
A.BEATTY 1/27/95	G.KOZAK 2/3/95	M3933/17–XX(N or S)
CHECKED/DATE M.HOLLMAN 2/3/95	APPROVED/DATE	SCALE: 3=1 SHEET 1 of 1

MODEL NUMBER: M3933/17–XX(N or S)
REV. C

UNCONTROLLED COPY