Chipsmall Limited consists of a professional team with an average of over 10 year of expertise in the distribution of electronic components. Based in Hongkong, we have already established firm and mutual-benefit business relationships with customers from,Europe,America and south Asia,supplying obsolete and hard-to-find components to meet their specific needs.

With the principle of “Quality Parts,Customers Priority,Honest Operation,and Considerate Service”,our business mainly focus on the distribution of electronic components. Line cards we deal with include Microchip,ALPS,ROHM,Xilinx,Pulse,ON,Everlight and Freescale. Main products comprise IC,Modules,Potentiometer,IC Socket,Relay,Connector.Our parts cover such applications as commercial,industrial, and automotives areas.

We are looking forward to setting up business relationship with you and hope to provide you with the best service and solution. Let us make a better world for our industry!

# Contact us

Tel: +86-755-8981 8866 Fax: +86-755-8427 6832
Email & Skype: info@chipsmall.com Web: www.chipsmall.com
Address: A1208, Overseas Decoration Building, #122 Zhenhua RD., Futian, Shenzhen, China

# Customer Information Sheet

| DRAWING No.: M80-851XXXX | SHEET 2 OF 2 | IF IN DOUBT - ASK | © | NOT TO SCALE | THIRD ANGLE PROJECTION | ALL DIMENSIONS IN mm |
|---|---|---|---|---|---|---|

SPECIFICATONS:
- MATERIAL:
  - MOULDING = POLYAMIDE 46 UL94V-0, BLACK
  - CONTACTS = PHOSPHOR BRONZE
  - LATCHES = BERYLLIUM COPPER
- FINISH:
  - CONTACTS (ALL OVER NICKEL):
    - 22 = 0.75µ GOLD ON CONTACT AREA, 3.0µ 90/10 TIN/LEAD ON TAILS
    - 42 = 0.75µ GOLD ON CONTACT AREA, 3.0µ 100% TIN ON TAILS
    - 45 = 0.75µ GOLD
  - LATCH = 1.25µ NICKEL
- ELECTRICAL:
  - CURRENT RATING (25°C) = 3.0A MAX.
  - CURRENT RATING (85°C) = 2.2A MAX.
  - WORKING VOLTAGE = 800V AC/DC
  - VOLTAGE PROOF = 1200V AC/DC
  - CONTACT RESISTANCE (INITIAL) = 20mΩ MAX.
  - CONTACT RESISTANCE (AFTER CONDITIONING) = 25mΩ MAX.
  - INSULATION RESISTANCE (INITIAL) = 1000MΩ MIN.
  - INSULATION RESISTANCE (AFTER CONDITIONING) = 100MΩ MIN.
- MECHANICAL:
  - DURABILITY = 500 OPERATIONS
- ENVIRONMENTAL:
  - TEMPERATURE RANGE = -55°C TO +125°C
- PACKING:
  - TUBE

FOR COMPLETE SPECIFICATION, SEE COMPONENT SPECIFICIATION C005XX (LATEST ISSUE)

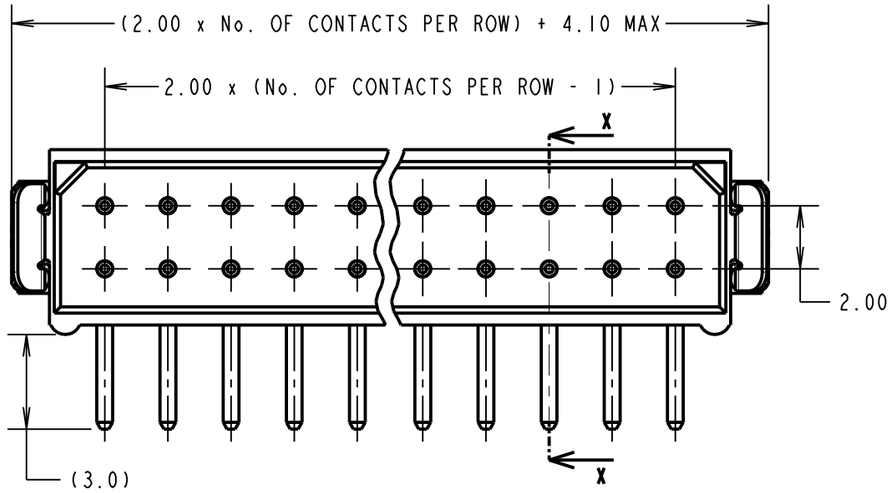


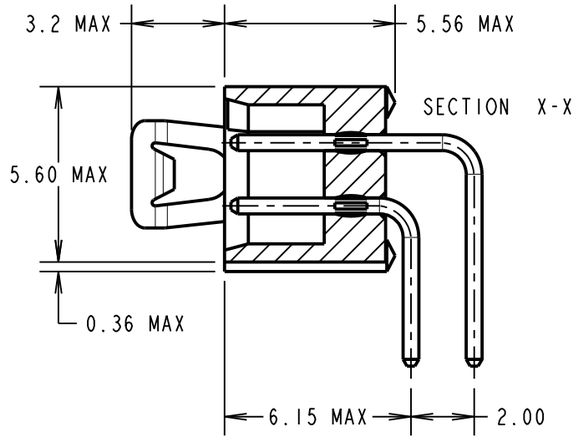


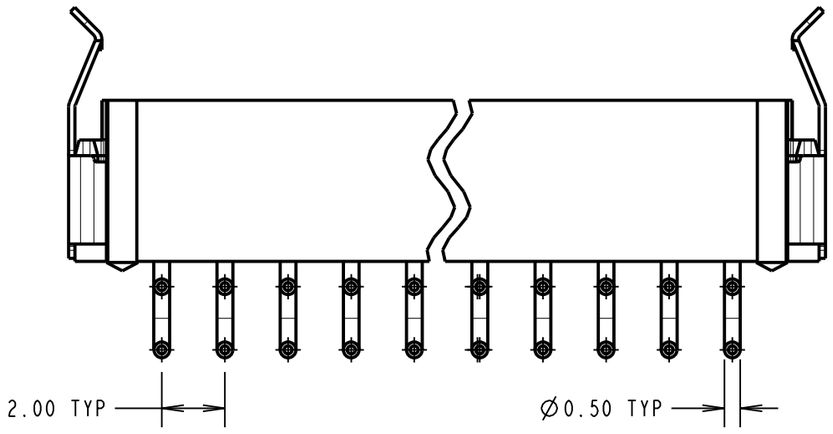


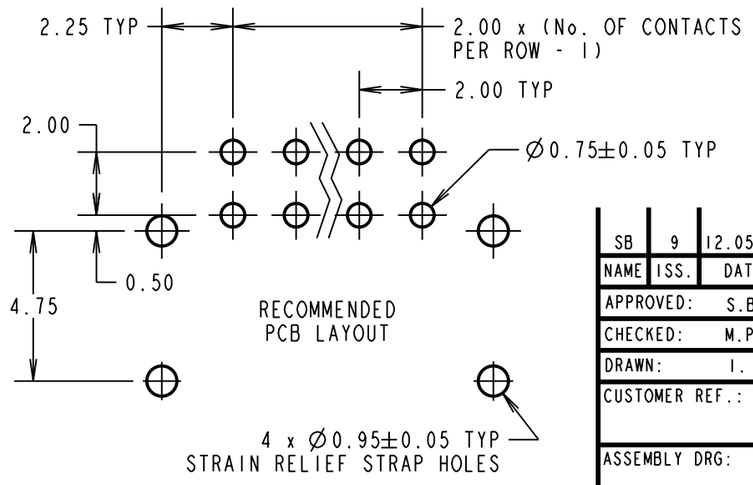


ORDER CODE:

**M80-851XXXX**

TOTAL No. OF CONTACTS:
04, 06, 08, 10, 12, 14, 16, 18, 20, 26, 34, 44

FINISH:
- 22 = SELECTIVE GOLD + TIN/LEAD
- 42 = SELECTIVE GOLD + 100% TIN
- 45 = GOLD

| SB | 9 | 12.05.15 | 12875 |
|---|---|---|---|
| NAME | ISS. | DATE | C/NOTE |
| APPROVED: | S.BENNETT | | |
| CHECKED: | M.PLESTED | | |
| DRAWN: | I. SANDY | | |
| CUSTOMER REF.: | | | |
| ASSEMBLY DRG: | | | |

NOTES:
1. 2-OFF STRAIN RELIEF STRAP M80-0030006 ARE INCLUDED WITH EACH CONNECTOR.

HARWIN

www.harwin.com
technical@harwin.com

THIS DRAWING AND ANY INFORMATION OR DESCRIPTIVE MATTER SET OUT HEREON ARE CONFIDENTIAL AND COPYRIGHT PROPERTY OF THE HARWIN GROUP AND MUST NOT BE DISCLOSED, LOANED, COPIED OR USED FOR MANUFACTURING, TENDERING OR FOR ANY OTHER PURPOSE WITHOUT THEIR WRITTEN PERMISSION.

TOLERANCES
X. = ±1mm
X.X = ±0.50mm
X.XX = ±0.10mm
X.XXX = ±0.01mm
ANGLES = ±5°
UNLESS STATED

MATERIAL: SEE ABOVE
FINISH: SEE ABOVE
S/AREA: mm²

TITLE: DATAMATE DIL HORIZONTAL 90° TAIL PLUG ASSEMBLY - LATCHED

DRAWING NUMBER: M80-851XXXX

SHT 2 OF 2