Chipsmall Limited consists of a professional team with an average of over 10 year of expertise in the distribution of electronic components. Based in Hongkong, we have already established firm and mutual-benefit business relationships with customers from,Europe,America and south Asia,supplying obsolete and hard-to-find components to meet their specific needs.

With the principle of “Quality Parts,Customers Priority,Honest Operation,and Considerate Service”,our business mainly focus on the distribution of electronic components. Line cards we deal with include Microchip,ALPS,ROHM,Xilinx,Pulse,ON,Everlight and Freescale. Main products comprise IC,Modules,Potentiometer,IC Socket,Relay,Connector.Our parts cover such applications as commercial,industrial, and automotives areas.

We are looking forward to setting up business relationship with you and hope to provide you with the best service and solution. Let us make a better world for our industry!

Contact us

Tel: +86-755-8981 8866 Fax: +86-755-8427 6832
Email & Skype: info@chipsmall.com Web: www.chipsmall.com
Address: A1208, Overseas Decoration Building, #122 Zhenhua RD., Futian, Shenzhen, China

Customer Information Sheet

DRAWING No.: M80-854XXXX SHEET 2 OF 2	IF IN DOUBT - ASK	©	NOT TO SCALE	THIRD ANGLE PROJECTION	ALL DIMENSIONS IN mm

ORDER CODE:

M80-854XXXX

TOTAL No. OF CONTACTS:
04, 06, 08, 10, 12, 14, 16, 18, 20, 26, 34, 44

FINISH:
22 = SELECTIVE GOLD + TIN/LEAD
45 = GOLD
42 = SELECTIVE GOLD / 100% TIN

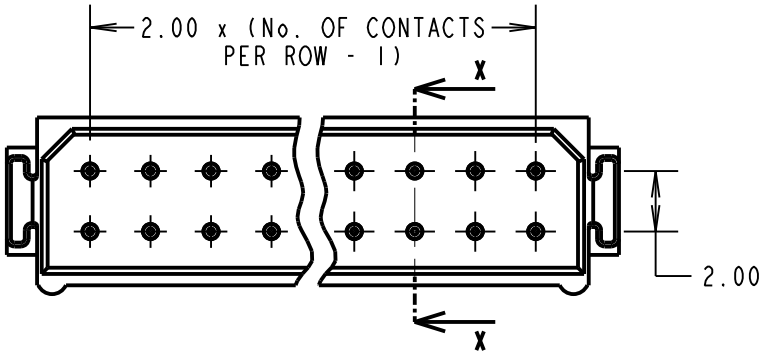

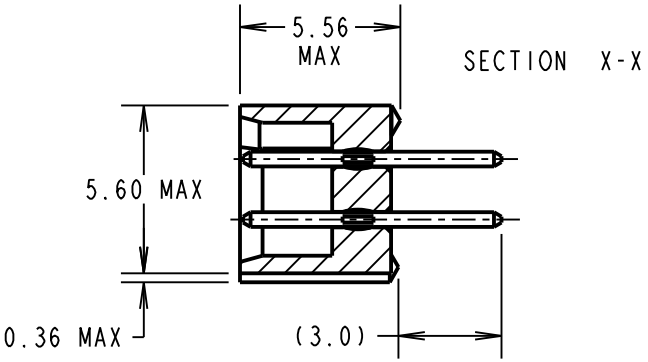

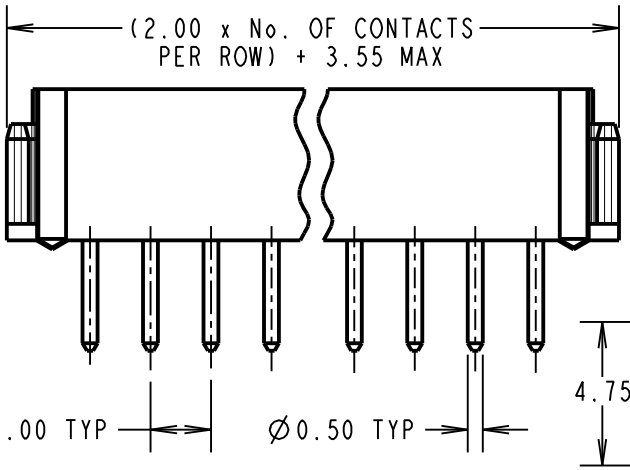

NOTES:
1. 2-OFF STRAIN RELIEF STRAPS M80-0030006 MAY BE USED WITH THIS CONNECTOR.

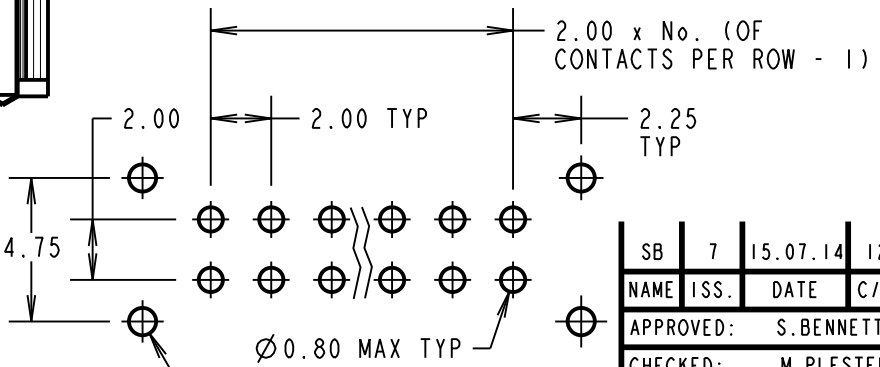

RECOMMENDED PCB LAYOUT

SPECIFICATONS:
MATERIAL:
MOULDING = POLYAMIDE 46 UL94V-0, BLACK
CONTACTS = PHOSPHOR BRONZE
FINISH:
CONTACTS:
22 = 0.75µ GOLD ON CONTACT AREA, 3µ 90/10 TIN/LEAD ON TAILS
42 = 0.75µ GOLD ON CONTACT AREA, 3.0µ 100% TIN ON TAILS
45 = 0.75µ GOLD
ELECTRICAL:
CURRENT RATING (25°C) = 3.0A MAX.
CURRENT RATING (85°C) = 2.2A MAX.
WORKING VOLTAGE = 800V AC/DC
VOLTAGE PROOF = 1200V AC/DC
CONTACT RESISTANCE (INITIAL) = 20 mΩ MAX.
CONTACT RESISTANCE (AFTER CONDITIONING) = 25 mΩ MAX.
INSULATION RESISTANCE (INITIAL) = 1000 MΩ MIN.
INSULATION RESISTANCE (AFTER CONDITIONING) = 100 MΩ MIN.

MECHANICAL:
DURABILITY = 500 OPERATIONS
ENVIRONMENTAL:
TEMPERATURE RANGE = -55°C TO +125°C
PACKING:
TUBE
FOR COMPLETE SPECIFICATION, SEE COMPONENT SPECIFICIATION C005XX (LATEST ISSUE)

NAME	ISS.	DATE	C/NOTE
SB	7	15.07.14	12531

APPROVED: S.BENNETT
CHECKED: M.PLESTED
DRAWN: I. SANDY
CUSTOMER REF.:
ASSEMBLY DRG:

HARWIN
www.harwin.com
technical@harwin.com

THIS DRAWING AND ANY INFORMATION OR DESCRIPTIVE MATTER SET OUT HEREON ARE CONFIDENTIAL AND COPYRIGHT PROPERTY OF THE HARWIN GROUP AND MUST NOT BE DISCLOSED, LOANED, COPIED OR USED FOR MANUFACTURING, TENDERING OR FOR ANY OTHER PURPOSE WITHOUT THEIR WRITTEN PERMISSION.

TOLERANCES
X. = ±1mm
X.X = ±0.25mm
X.XX = ±0.10mm
X.XXX = ±0.01mm
ANGLES = ±5°
UNLESS STATED

MATERIAL: SEE ABOVE
FINISH: SEE ABOVE
S/AREA: mm²

TITLE: DATAMATE DIL VERTICAL PC TAIL PLUG ASSEMBLY (RoHS)

DRAWING NUMBER: M80-854XXXX

SHT 2 OF 2