Chipsmall Limited consists of a professional team with an average of over 10 year of expertise in the distribution of electronic components. Based in Hongkong, we have already established firm and mutual-benefit business relationships with customers from,Europe,America and south Asia,supplying obsolete and hard-to-find components to meet their specific needs.

With the principle of “Quality Parts,Customers Priority,Honest Operation,and Considerate Service”,our business mainly focus on the distribution of electronic components. Line cards we deal with include Microchip,ALPS,ROHM,Xilinx,Pulse,ON,Everlight and Freescale. Main products comprise IC,Modules,Potentiometer,IC Socket,Relay,Connector.Our parts cover such applications as commercial,industrial, and automotives areas.

We are looking forward to setting up business relationship with you and hope to provide you with the best service and solution. Let us make a better world for our industry!

Contact us

Tel: +86-755-8981 8866 Fax: +86-755-8427 6832
Email & Skype: info@chipsmall.com Web: www.chipsmall.com
Address: A1208, Overseas Decoration Building, #122 Zhenhua RD., Futian, Shenzhen, China

General Description

The MAX14912/MAX14913 evaluation kit (EV kit) provides a proven design to evaluate the MAX14912 or MAX14913 octal digital output driver. The EV kit includes an evaluation board and a graphical user interface (GUI) that provides communication from a PC to the target device through a USB port.

The EV kit includes Windows 7, Windows 8 and Windows 10 compatible software for exercising the features of the IC. The EV kit GUI allows controlling the MAX14912/MAX14913 in either Parallel Mode or Serial (SPI) Mode.

The EV kit must be powered from an external +24V power supply and can consume up to 10A when fully loaded.

The MAX14912EVKIT/MAX14913EVKIT comes with a MAX14912AKN+, or MAX14913AKN+ installed in a 56-pin, 8 x 8mm TQFN-EP package.

Features

- Robust Operation with Wide Range of Input Voltages and Load Conditions
- SPI Interface with up to 20MHz Clock Rate
- Parallel Interface with up to 200kHz Switching Rate
- Manual Control in Parallel Mode
- Wide Logic Voltage Range
- -40°C to +125°C Temperature Range
- On-Board LED Indication of Status and Fault Conditions
- Daisy-Chain Capability
- Reverse-Voltage Protection
- Proven PCB Layout
- Fully Assembled and Tested
- Windows® 7, Windows 8 and Windows 10 Compatible Software

***Ordering Information* appears at end of data sheet.**

MAX14912/MAX14913 EV Kit Board Photo

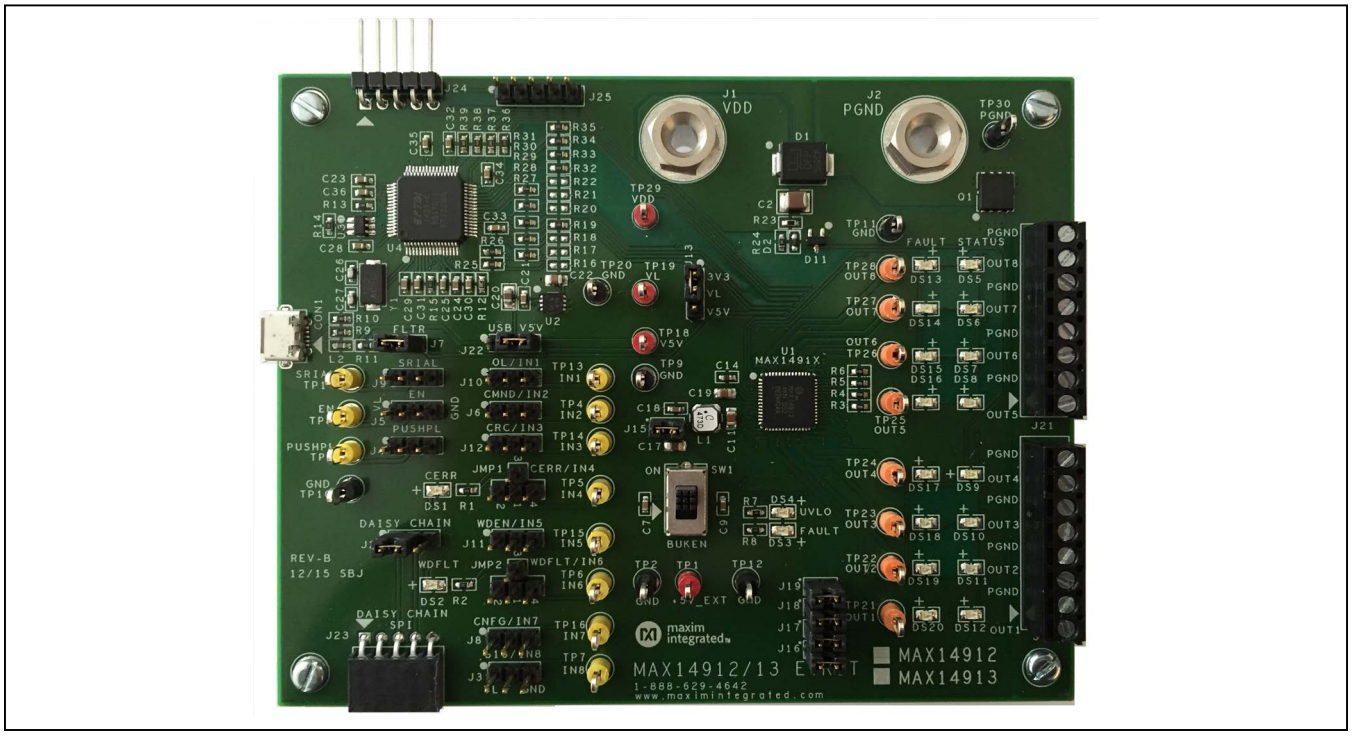

Windows is a registered trademark and registered service mark of Microsoft Corporation.

maxim integrated™

System Block Diagram

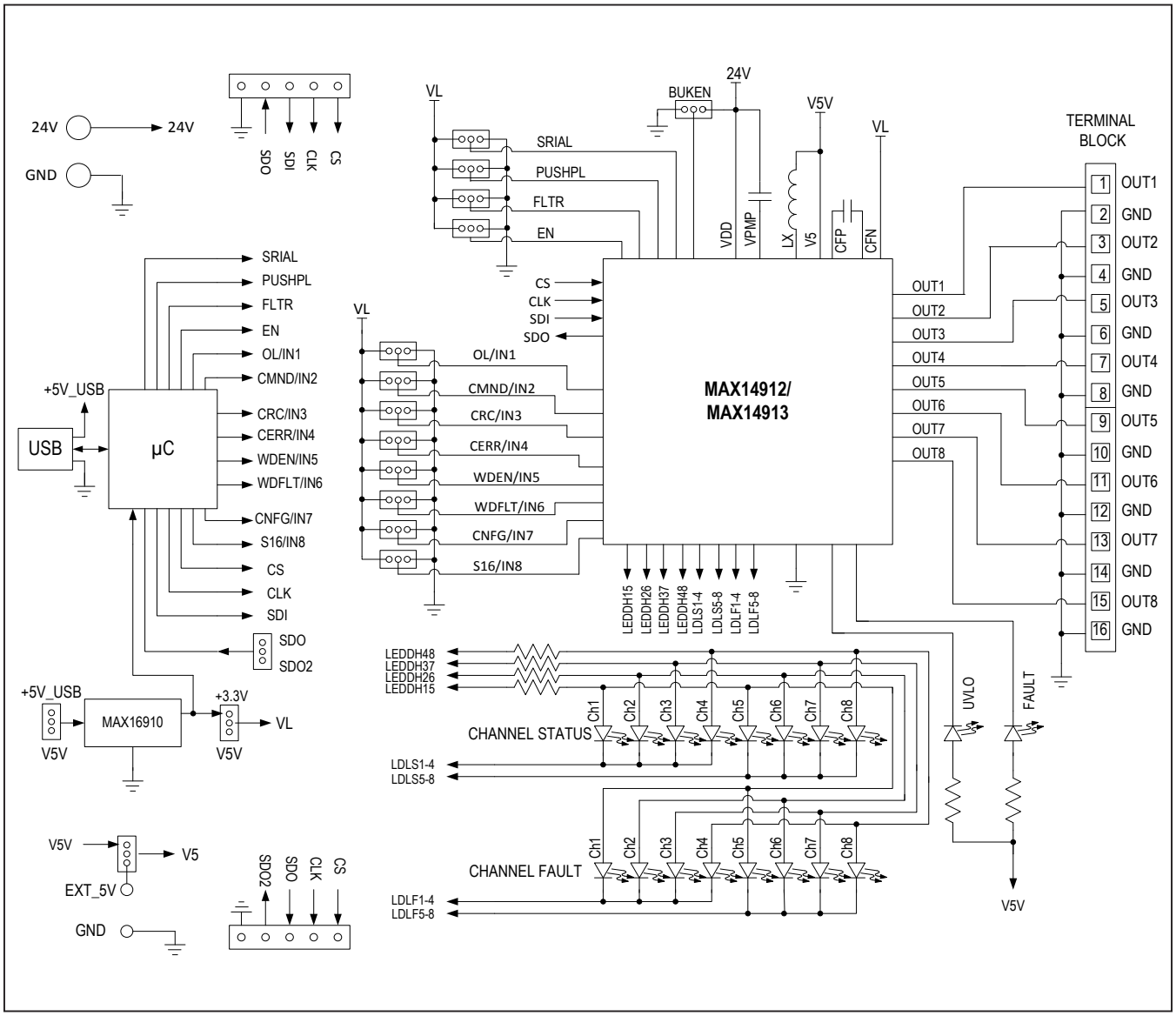

MAX14912/MAX14913EV Kit Files

FILE	DECRIPTION
MAX14912EVKITSetupV1.0.exe	Application Program (GUI)

Quick Start

Required Equipment

- MAX14912/MAX14913 EV kit
- +24V power supply
- Voltmeter (optional)
- Oscilloscope (optional)
- PC with installed Windows 7, Windows 8 or Windows 10 and USB port

Note: In the following section(s), software-related items are identified by bolding. Text in bold refers to items directly from the EV system software. Text in **bold and underline** refers to items from the Windows operating system.

Procedure

The EV kit is fully assembled and tested. Follow the steps below to verify board operation:

1) Visit **www.maximintegrated.com/evkitsoftware** to download the latest version of the EV kit software, MAX14912EVKIT.ZIP. Save the EV kit software to a temporary folder and uncompress the ZIP file.
2) Install the EV kit software on your computer by running the MAX14912EVKITSetupV1.0.exe program inside the temporary folder. The program files are copied to your PC and icons are created in the Windows **Start | Programs** menu.
3) Verify that all jumpers are in their default positions for the SPI or parallel mode operation (Table 1). Note that the hardware is configured for SPI communication by default.
4) Power up the EV kit with +24V from external power supply.
5) Start the EV kit software by opening its icon in the **Start | Programs** menu. The EV kit software appears as shown in Figure 1. Verify that the lower-right status bar indicates the EV kit hardware is **Connected**.The GUI automatically detects which EV kit is connected to the PC, the MAX14912 or MAX14913, and enables

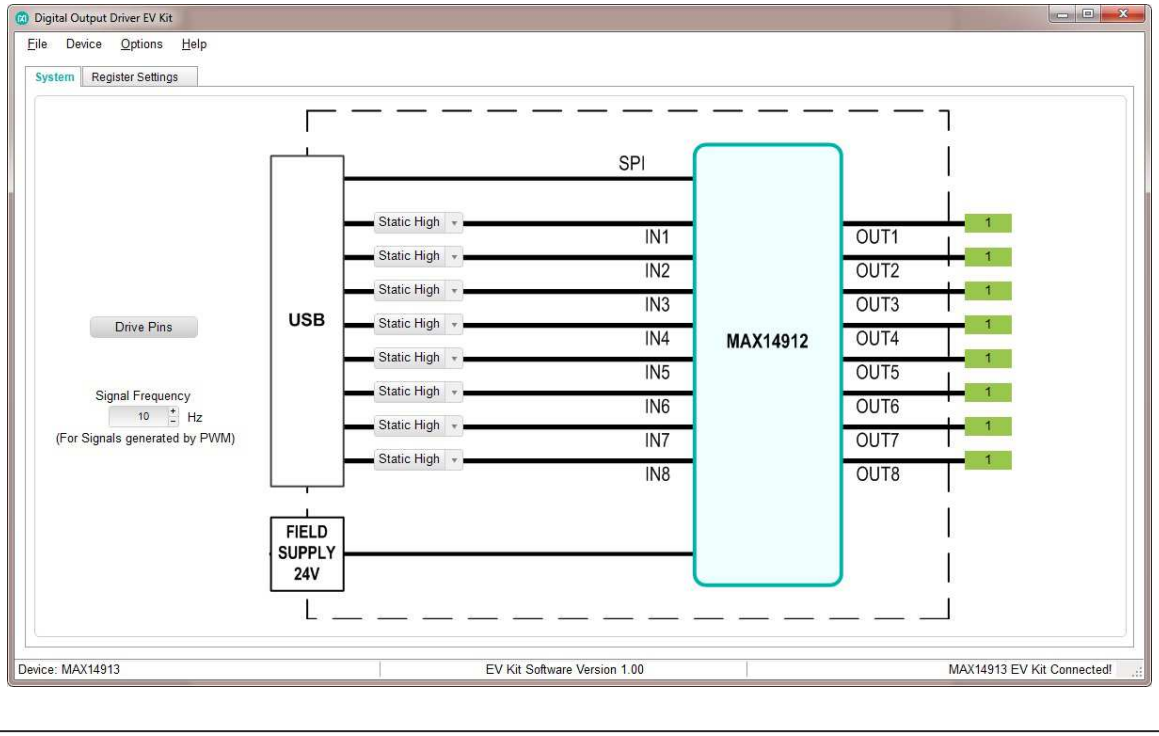

Figure 1. Digital Output Driver EV Kit GUI. System Tab

Table 1. MAX14912/MAX14913 Board Shunt Positions and Settings

HEADER	SHUNT POSITION	DESCIPTION
J3	Open*	Set IN8 high or low/select 16-bit or 8-bit SPI operation in GUI
	1-2	Set IN8 high and OUT8 on/high (stand-alone parallel mode)
	2-3	Set IN8 low and OUT8 off/low (stand-alone parallel mode)
J4	Open*	Set push-pull or high-side mode in GUI
	1-2	Set push-pull mode (stand-alone parallel mode)
	2-3	Set high-side mode (stand-alone parallel mode)
J5	Open*	Enable/disable outputs in GUI
	1-2	Enable outputs (stand-alone parallel mode)
	2-3	Disable (three-state) outputs (stand-alone parallel mode)
J6	Open*	Set IN2 high or low/enable command mode
	1-2	Set IN2 high and OUT2 on/high (stand-alone parallel mode)
	2-3	Set IN2 low and OUT2 off/low (stand-alone parallel mode)
J7	1-2*	Enable glitch filtering on all parallel logic inputs and $\overline{CS}$
	Open	Disable parallel logic glitch filtering
J8	Open*	Set IN7 high or low/Enable configuration command in GUI
	1-2	Set IN7 high and OUT7 on/high (stand-alone parallel mode)
	2-3	Set IN7 low and OUT7 off/low (stand-alone parallel mode)
J9	Open*	Select serial or parallel interface active in GUI
	1-2	Enable serial peripheral interface (SPI)
	2-3	Enable parallel interface (stand-alone parallel mode)
J10	Open*	Enable/disable open-load detection/Set IN1 in GUI
	1-2	Set IN1 high and OUT1 on/high (stand-alone parallel mode)
	2-3	Set IN1 low and OUT1 off/low (stand-alone parallel mode)
J11	Open*	Enable watchdog timer/set IN5 in GUI
	1-2	Set IN5 high and OUT5 on/high (stand-alone parallel mode)
	2-3	Set IN5 low and OUT5 off/low (stand-alone parallel mode)
J12	Open*	Enable or disable CRC detection/set IN3 in GUI
	1-2	Set IN3 high and OUT3 on/high (stand-alone parallel mode)
	2-3	Set IN3 low and OUT3 off/low (stand-alone parallel mode)
J13	1-2*	Select 3.3V logic level
	2-3	Select 5V logic level
J15	1-2*	5V supply. Replace J15 shunt with a current meter to measure power consumption.
J16	1-2*	Connect Status and Fault LED anodes for outputs 1 and 5 to the driver
	Open	Disconnect Status and Fault LED anodes for outputs 1 and 5 to the driver

Table 1. MAX14912/MAX14913 Board Shunt Positions and Settings (continued)

HEADER	SHUNT POSITION	DESCIPTION
J17	1-2*	Connect Status and Fault LED anodes for outputs 2 and 6 to the driver
	Open	Disconnect Status and Fault LED anodes for outputs 2 and 6 to the driver
J18	1-2*	Connect Status and Fault LED anodes for outputs 3 and 7 to the driver
	Open	Disconnect Status and Fault LED anodes for outputs 3 and 7 to the driver
J19	1-2*	Connect Status and Fault LED anodes for outputs 4 and 8 to the driver
	Open	Disconnect Status and Fault LED anodes for outputs 4 and 8 to the driver
J22	1-2	Select 5V power to U4 from USB port (CON1)
	2-3*	Select 5V power to U4 from integrated buck regulator (U1)
J26	1-2*	Disable daisy-chain communication
	2-3	Enable daisy-chaining of two boards and use GUI to send a command
JMP1	Open*	Enable CRC Error Detection output/Set IN4 high or low in GUI
	1-2	Set IN4 high and OUT4 on/high (stand-alone parallel mode)
	1-4	Set IN4 low and OUT4 off/low (stand-alone parallel mode)
	1-3	Connect CERR LED (DS1) to U1 to indicate communication error if CRC is enabled on J12
JMP2	Open*	Enable watchdog fault output/set IN6 high or low in GUI
	1-2	Set IN6 high and OUT6 on/high (stand-alone parallel mode)
	1-4	Set IN6 low and OUT6 off/low (stand-alone parallel mode)
	1-3	Connect WDFLT LED (DS2) to U1 to indicate communication error if Watchdog is enabled on J11
SW1	2-3, 5-6*	Enable buck regulator of U1 to generate 5V (ON position)
	1-2, 4-5	Disable buck regulator of U1. Provide an external +5V to TP1.

**Default configuration.*

serial command mode communication. Any configuration change can be made on Register Settings tab. (The following steps are used to verify functionality of the devices.)

6) Select **System** tab.
7) Configure each input signal as **Static High** from the pull-down menu, as shown in Figure 1.
8) Click on **Drive Pins** button on the left-side of the GUI.
9) Observe all the status LEDs (DS5 to DS12) light up, and measured output voltages on corresponding OUT_ test point match V_{DD} level.
10) Change the input signal to **Static Low** from the pulldown menu and observe as corresponding LED turned off.
11) Change the input signal to **Static PWM**. Select the duty cycle from the pulldown menu, refer to Figure 2, and observe the output on corresponding OUT_ test point by oscilloscope.

General Description of Software

When the GUI starts, it automatically detects which device is connected to the PC and indicates that in the status bar at the bottom-edge of the GUI. There are two tabs available to control the EV kit. The **System** tab provides system-level control of the selected output pins, including static or dynamic PWM (Pulse-Width Modulation) output in either serial or parallel Mode. The **Register Settings** tab provides full control of the device, including mode selection, per-channel configuration, and enhanced diagnostics of the device. In Serial mode, the SPI clock is set to 5MHz.

System Tab

The **System** tab allows driving the output pins by setting up the input signal to the device through the on-board USB to SPI/GPIO bridge IC, U4. Each input pin can be configured as Static High, Static Low, Static PWM, or PWM from the pulldown menu on the input lines in the block diagram shown in the **System** tab. Refer to Figure 3.

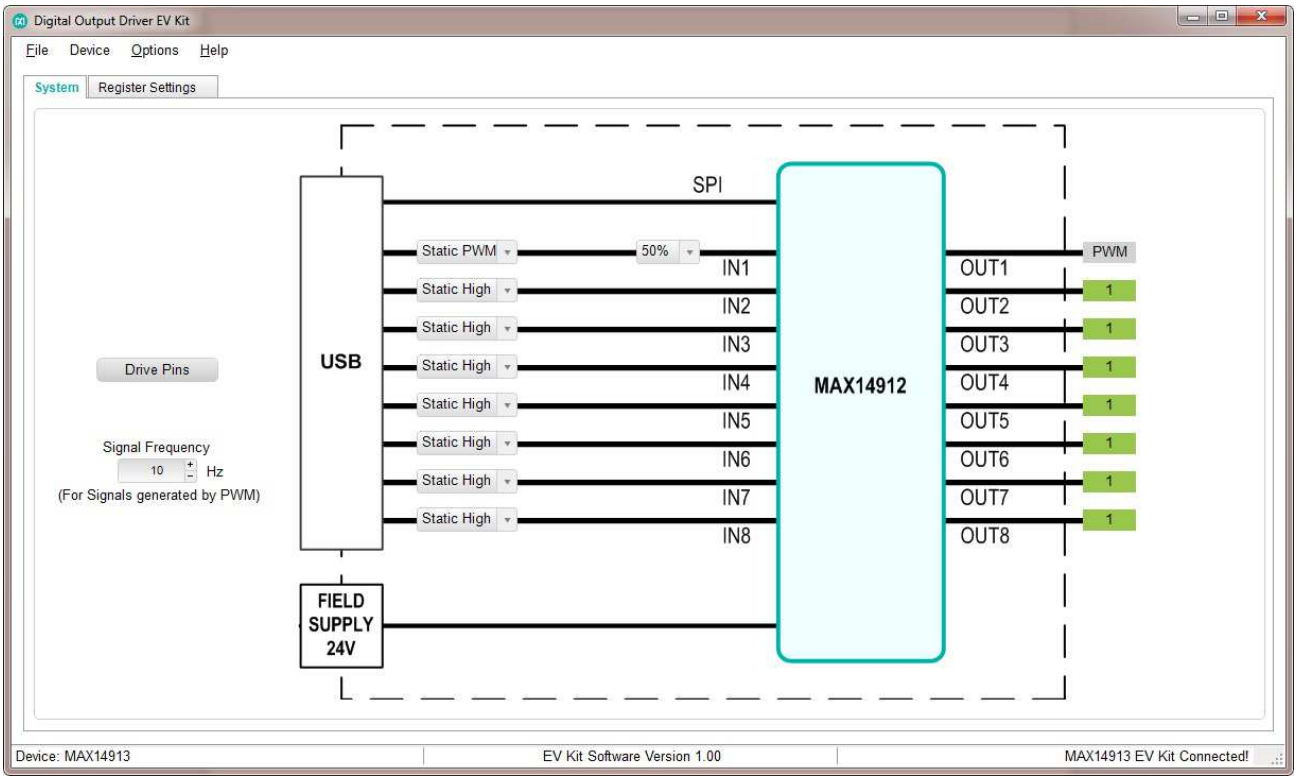

Figure 2. System Tab. Static PWM Configuration

Click **Drive Pins** button on the left-side of the GUI after configuring the inputs. The outputs follow the state of the inputs, while indicators connected to the OUT_ pins show the static state or dynamic operation mode.

Connect the oscilloscope probe to OUT_ pin to see the output signal in real-time.

In static PWM and PWM mode, the GUI generates a 1kHz (if SRIAL pin is high) or 20kHz (if SRIAL pin is low) square wave. The level of modulation is selectable from the pulldown menu from 0% to 100%. Refer to Figure 2.

In PWM mode, the signal is modulated by a selected waveform. It can be either a sine wave with a selectable phase, triangle, or sawtooth wave. Refer to Figure 3. The modulation frequency is adjustable from 0Hz up to 60Hz by pressing the **+** or **-** buttons. This feature is useful to control small motors, including 3-phase motors, and actuators.

Register Settings Tab

The **Register Settings** tab is used for detailed configuration of the device to explore all the available features in either parallel (SRIAL is low) or serial (SPI) mode (SRIAL is high). SPI communication is also available in parallel mode with the MAX14912. For a detailed explanation of the features, refer to the MAX14912/MAX14913 data sheet. The mode and pin configuration can be set through the MAX14912 I/O pins control group box on the right-side of the tab. Refer to Figure 4. The pin set slide buttons allow the setting of the input pins high or low, while the read status boxes provide visual colored states of the input/output pins.

The EV kit supports a number of different devices, as listed in Table 3.

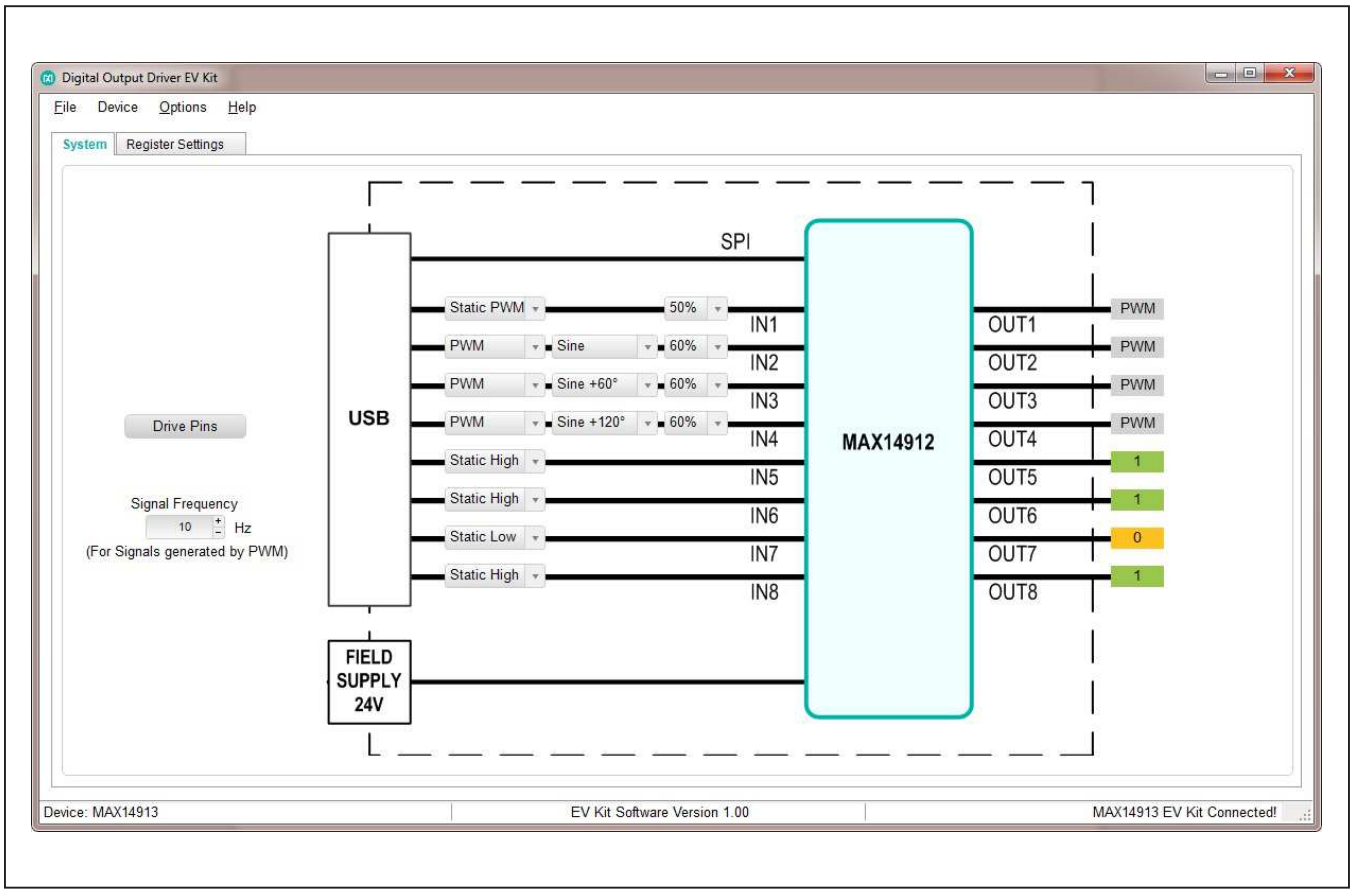

Figure 3. System Tab. PWM Configuration

User-Supplied SPI

To evaluate the EV kit with a user-supplied SPI bus, disconnect the board from the PC. Apply the user-supplied CS, SCLK (CLK), MOSI (SDI) and MISO (SDO) to the J25 header. Make sure the master ground is connected to the J25.5 ground pin.

The logic level of the external SPI host should be compatible with the J13 shunt selection, (e.g., 3.3V or 5V). Use an external VL logic supply to TP19 to support different logic levels from 1.6V to 5.5V. In this case, J13 shunt should be removed.

Daisy-Chaining

The two MAX1491X EV kits can be daisy-chained by pairing J24 of board #2 and J23 of board #1 in order to control 16 outputs through a single SPI host. The J26 jumper of board #1 must be set to 2-3 position and both boards have to be powered from an external +24V. The PC should be connected to board #1.

It is also required that board #2 has installed jumpers for SPI communication: J9: 1-2, J5: 1-2, J6: 1-2, J12: 2-3, and J11: 2-3.

The daisy-chain feature is not supported by rev 1.0 GUI and can be evaluated using user-supplied SPI interface. Refer to the MAX14912/MAX14913 data sheet for daisy-chain command description.

External +5V Power Supply

An external +5V voltage can supply to TP1, +5V_EXT. In this case the internal dc-dc controller should be disabled (BUKEN = low) by switching SW1 into off position.

Reverse-Voltage Protection

The EV kit has reverse-voltage protection circuitry built on the return path of the supply current. During normal operation, the Q1 nMOSFET is ON since the gate voltage is about 7.5V higher than the source. Very low R_{ON} of Q1 MOSFET helps to minimize voltage drop and power dissipation to a negligible level. If V_{DD} becomes negative with respect to the supply ground, the MOSFET is turned off and disconnects the current path.

Stand-Alone Operation

The EV kit can work without connecting to a PC. In this case, jumpers should set the inputs, refer to Table 1 for proper shunt positions. In stand-alone operation, the devices should be configured for parallel mode. It is recommended to enable internal de-bouncing by placing the J7 shunt for proper operation.

This EV kit comes with two assembly options:

The MAX14912EVKIT# comes with a MAX14912ATE+ in a 56-pin TQFN package.

The MAX14913EVKIT# comes with a MAX14913ATE+ in a 56-pin TQFN package.

Both EV Kit variations use the same PCB and bill of materials, and the only variation is the IC assembled at U1.

Table 3. Products supported with MAX14912/MAX14913 EV kit

PART #	DESCRIPTION
MAX14912	Octal High-Speed Output Driver
MAX14913	Octal High-Speed Output Driver

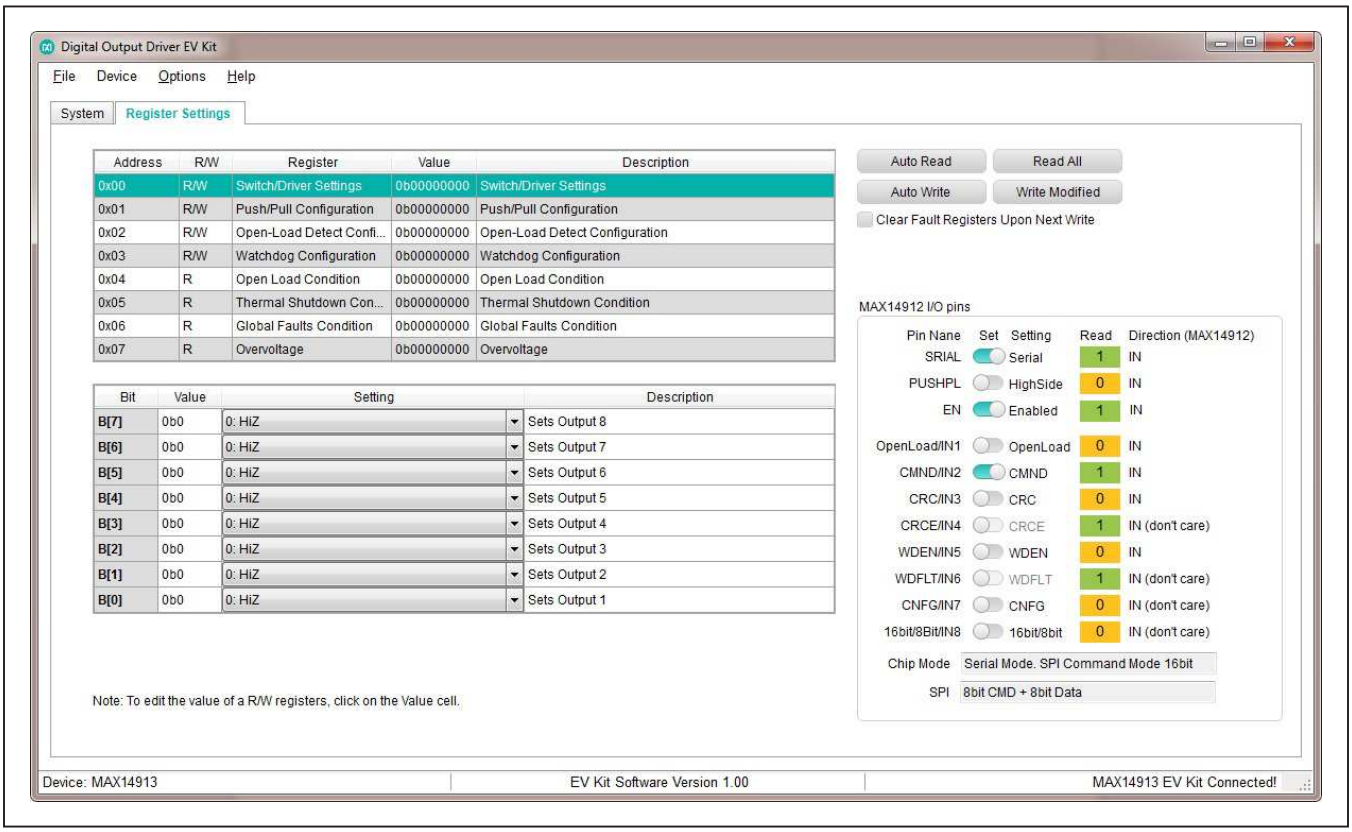

Figure 4. Digital Output Driver EV Kit GUI. Register Settings Tab

The two tables on the left side of the tab are the register map (upper table) and bit-by-bit control and description table (lower table). When the register is selected in upper table, the lower table gives the description of each bit and allows changing the register settings using drop down menus for writable registers 0x00 to 0x03. The register setting can be changed directly in the register map table by double clicking on the Value cell. Each data entry should follow by the "Enter/Return" button on the keyboard. The Value cell accepts binary (0b), decimal or hex (0x) numbers and automatically convert them into binary format. The modified register changes its color from black to red until the data will be actually written to the register. There are several write and read options available through the corresponding control buttons on the upper right side of the GUI.

*When the **Auto Write** button is selected, any data typed in, or selected through, the **Setting** pulldown menu will be automatically written into the corresponding writable register. The button renamed to **Stop Auto Write** and auto write function can be canceled by clicking on this button second time.*

*When the **Auto Read** button is selected, the write function is disabled and the GUI is constantly monitoring the status and fault conditions of the device. Clicking a second time on the button, which becomes **Stop Auto Read**, allows canceling this operation.*

*The **Read All** button performs a read operation of all registers after each click.*

*When any fault conditions occur, they will set the bit(s) in the corresponding read-only registers 0x04 to 0x07. The fault conditions should be carefully evaluated and removed externally (overvoltage/under voltage, overload, open load, etc.). After that, select the **Clear Fault Registers Upon Next Write** check box and perform any write/read operation to clear fault bits.*

*The **Write Modified** button performs write operation to all modified registers after each click.*

Component List, PCB Layout, and Schematic

See the following links for component information, PCB layout diagrams, and schematics.

- **MAX14912/MAX14913 EV BOM**
- **MAX14912/MAX14913 EV PCB Layout**
- **MAX14912/MAX14913 EV Schematics**

Ordering Information

PART	TYPE
MAX14912EVKIT#*	EVKIT
MAX14913EVKIT#	EVKIT

**Future Product—Contact factory for availability.*

#Denotes RoHS compliant package.

Revision History

REVISION NUMBER	REVISION DATE	DESCRIPTION	PAGES CHANGED
0	3/16	Initial release	—

For pricing, delivery, and ordering information, please contact Maxim Direct at 1-888-629-4642, or visit Maxim Integrated's website at www.maximintegrated.com.

Maxim Integrated cannot assume responsibility for use of any circuitry other than circuitry entirely embodied in a Maxim Integrated product. No circuit patent licenses are implied. Maxim Integrated reserves the right to change the circuitry and specifications without notice at any time.

Maxim Integrated and the Maxim Integrated logo are trademarks of Maxim Integrated Products, Inc. © 2016 Maxim Integrated Products, Inc.

TITLE: Bill of Materials

DATE: 12/11/2015

DESIGN: max14912_evkit_b

NOTE: DNI--> DO NOT INSTALL ; DNP--> DO NOT PROCURE

ITEM	REF_DES	DNI/ DNP	QTY	MFG PART #	MANUFACTURER	VALUE	DESCRIPTION	COMMENTS
1	C2	-	1	C3225X7S1H106K250AB	TDK	10UF	CAPACITOR; SMT (1210); CERAMIC CHIP; 10UF; 50V; TOL=10%; TG=-55 DEGC TO +125 DEGC; TC=X7S	
2	C3-C6, C8, C10, C12, C13, C15, C16, C20	-	11	GMK212B7105KG	TAIYO YUDEN	1.0UF	CAPACITOR; SMT (0805); CERAMIC; 1UF; 35V; TOL=10%; MODEL=GMK SERIES; TG=-55 DEGC TO +125 DEGC; TC=X7R	
3	C7, C9, C18, C21, C25, C28, C30-C36	-	13	GRM188R72A104KA35; CC0603KRX7R0BB104	MURATA; TDK	0.1UF	CAPACITOR; SMT (0603); CERAMIC CHIP; 0.1UF; 100V; TOL=10%; TG=-55 DEGC TO +125 DEGC; TC=X7R	
4	C11, C17, C19, C22	-	4	CGA4J1X7S1C106K125	TDK	10UF	CAPACITOR; SMT (0805); CERAMIC CHIP; 10UF; 16V; TOL=10%; TG=-55 DEGC TO +125 DEGC; TC=X7S; AUTO	
5	C14	-	1	GRM188F51H224ZA01D	MURATA	0.22UF	CAPACITOR; SMT (0603); CERAMIC CHIP; 0.22UF; 50V; TOL=20%; MODEL=Y5V; TG=-55 DEGC TO +125 DEGC; TC=+	
6	C23, C24, C29	-	3	C1608X5R1E475K080AC	TDK	4.7UF	CAPACITOR; SMT (0603); CERAMIC CHIP; 4.7UF; 25V; TOL=10%; MODEL=C SERIES; TG=-55 DEGC TO +85 DEGC; TC=X5R	
7	C26, C27	-	2	C0603HQN101-180FNP	KEMET/VENKEL	18PF	CAPACITOR; SMT; 0603; CERAMIC; 18pF; 50V; 0.25%; C0G; -55degC to + 125degC; 0 +/-30PPM/degC	
8	CON1	-	1	ZX62RD-AB-5P8	HIROSE ELECTRIC CO LTD.	ZX62RD-AB-5P8	CONNECTOR; MALE; SMT; MICRO-USB CONNECTOR MEETING REQUIREMENTS OF USB 2.0 STANDARD; RIGHT ANGLE; 5PINS	MICRO-USB
9	D1	-	1	SMDJ36CA	LITTELFUSE	36V	DIODE; TVS; SMC (DO-214AB); VRM=36V; IPP=51.6A	
10	D2	-	1	RB751S40	FAIRCHILD SEMICONDUCTOR	RB751S40	DIODE; SCH; SMT (SOD-523F); PIV=40V; IF=0.03A	
11	D11	-	1	BZX84-A7V5	NXP	7.5V	DIODE; ZNR; SMT (SOT-23); VZ=7.5V; IZ=0.005A	
12	DS1-DS4, DS13-DS20	-	12	LTST-C171KRKT	LITE-ON ELECTRONICS; INC.	LTST-C171KRKT	DIODE; LED; STANDARD; RED; SMT (0805); PIV=5.0V; IF=0.08A; -55 DEGC TO +85 DEGC	

13	DS5-DS12	-	8	LTST-C171GKT	LITE-ON ELECTRONICS; INC.	LTST-C171GKT	DIODE; LED; STANDARD; GREEN; SMT (0805); PIV=5.0V; IF=0.12A; -55 DEGC TO +85 DEGC	
14	J1, J2	-	2	3267	POMONA ELECTRONICS	3267	CONNECTOR; MALE; PANELMOUNT; STANDARD UNINSULATED BANANA JACK; STRAIGHT; 1PIN	
15	J3-J6, J8-J13, J22, J26	-	12	PCC03SAAN	SULLINS	PCC03SAAN	CONNECTOR; MALE; THROUGH HOLE; BREAKAWAY; STRAIGHT THROUGH; 3PINS; -65 DEGC TO +125 DEGC	
16	J7, J15-J19	-	6	PCC02SAAN	SULLINS	PCC02SAAN	CONNECTOR; MALE; THROUGH HOLE; BREAKAWAY; STRAIGHT THROUGH; 2PINS; -65 DEGC TO +125 DEGC	
17	J20, J21	-	2	OSTTE080104	ON-SHORE TECHNOLOGY INC.	OSTTE080104	CONNECTOR; MALE; THROUGH HOLE; TERMINAL BLOCKS-WIRE TO BOARD; STRAIGHT; 8PINS	
18	J23	-	1	SSQ-105-02-L-S-RA	SAMTEC	SSQ-105-02-L-S-RA	CONNECTOR; FEMALE; THROUGH HOLE; SSQ SERIES; 0.025IN SQ POST SOCKET; RIGHT ANGLE; 5PINS	
19	J24	-	1	TSW-105-25-T-S-RA	SAMTEC	TSW-105-25-T-S-RA	CONNECTOR; MALE; THROUGH HOLE; 0.025IN SQ POST HEADER; RIGHT ANGLE; 5PINS	
20	J25	-	1	PBC05SAAN	SULLINS ELECTRONICS CORP.	PBC05SAAN	CONNECTOR; MALE; THROUGH HOLE; BREAKAWAY; STRAIGHT; 5PINS; -65 DEGC TO +125 DEGC	
21	JMP1, JMP2	-	2	PEC04SAAN	SULLINS ELECTRONICS CORP.	PEC04SAAN	CONNECTOR; MALE; THROUGH HOLE; BREAKAWAY; STRAIGHT; 4PINS	
22	L1	-	1	LPS4018-104MR	COILCRAFT	100UH	INDUCTOR; SMT; FERRITE BOBBIN CORE; 100UH; TOL=+/-20%; 0.56A	100UH
23	L2	-	1	MMZ1608B601C	TDK	600	INDUCTOR; SMT (0603); FERRITE-BEAD; 600; TOL=+/-25%; 0.5A; -55 DEGC TO +125 DEGC	
24	Q1	-	1	AON6452	ALPHA & OMEGA SEMICONDUCTOR	AON6452	TRAN; N-CHANNEL SDMOS POWER TRANSISTOR; NCH; DFN8-EP; PD-(2W); I-(26A); V-(100V)	

25	R1, R2, R7, R8	-	4	CRCW06031001FK; ERJ-3EKF1001V	VISHAY DALE; PANASONIC	1K	RESISTOR; 0603; 1K; 1%; 100PPM; 0.10W; THICK FILM	
26	R3-R6	-	4	CRCW0603470RFK; ERJ-3EKF4700	VISHAY DALE/PANASONIC	470	RESISTOR, 0603, 470 OHM, 1%, 100PPM, 0.10W, THICK FILM	
27	R9, R10	-	2	ERJ-3EKF28R0V	PANASONIC	28	RESISTOR; 0603; 28 OHM; 1%; 100PPM; 0.10W; THICK FILM	
28	R11, R13, R19	-	3	CRCW060310K0FK; 9C06031A1002FK; ERJ-3EKF1002	VISHAY DALE/YAGEO PHICOMP/ PANASONIC	10K	RESISTOR; 0603; 10K; 1%; 100PPM; 0.10W; THICK FILM	
29	R12	-	1	CRCW060315K0FK	VISHAY DALE	15K	RESISTOR, 0603, 15K OHM,1%, 100PPM, 0.10W, THICK FILM	
30	R14	-	1	CRCW06032K20FK	VISHAY DALE	2.2K	RESISTOR, 0603, 2.2K OHM, 1%, 100PPM, 0.10W, THICK FILM	
31	R15	-	1	CRCW060312K0FK	VISHAY DALE	12K	RESISTOR, 0603, 12K OHM, 1%, 100PPM, 0.10W, THICK FILM	
32	R23	-	1	CRCW06033K00FK	VISHAY DALE	3K	RESISTOR; 0603; 3K OHM; 1%; 100PPM; 0.10W; THICK FILM	
33	R24	-	1	CRCW06031003FK; ERJ-3EKF1003	VISHAY DALE/PANASONIC	100K	RESISTOR; 0603; 100K; 1%; 100PPM; 0.10W; THICK FILM	
34	R25-R39	-	15	CRCW06030000ZS; MCR03EZPJ000; ERJ-3GEY0R00	VISHAY DALE/ROHM/PANASONIC	0	RESISTOR; 0603; 0 OHM; 0%; JUMPER; 0.10W; THICK FILM	
35	SCREW1-SCREW4	-	4	EVKIT_STANDOFF_M2.5_20MM	?	EVKIT_STANDOFF_M2.5_20M	KIT; ASSY-STANDOFF20MM; 1PC. STANDOFF/FEM/HEX/M2.5/(20MM)/ALUMINUM; 1PC. SCREW/SLOT/PAN/M2.5/(6MM)/STEEL; ZINC PLATE	
36	SU1-SU11	-	11	SX1100-B	KYCON	SX1100-B	TEST POINT; JUMPER; STR; TOTAL LENGTH=0.24IN; BLACK; INSULATION=PBT;PHOSPHOR BRONZE CONTACT=GOLD PLATED	
37	SW1	-	1	EG2207	E-SWITCH	EG2207	SWITCH; DPDT; THROUGH HOLE; STRAIGHT; 30V; 0.2A; SWITCH SLIDE DPDT 200MA 30V; RCOIL=0 OHM; RINSULATION=0 OHM	

38	TP1, TP18, TP19, TP29	-	4	5010	KEYSTONE	N/A	TESTPOINT WITH 1.80MM HOLE DIA, RED, MULTIPURPOSE;	
39	TP2, TP9-TP12, TP20, TP30	-	7	5011	KEYSTONE	N/A	TEST POINT; PIN DIA=0.125IN; TOTAL LENGTH=0.445IN; BOARD HOLE=0.063IN; BLACK; PHOSPHOR BRONZE WIRE SILVER PLATE FINISH;	
40	TP3-TP8, TP13-TP17	-	11	5014	KEYSTONE	N/A	TEST POINT; PIN DIA=0.125IN; TOTAL LENGTH=0.445IN; BOARD HOLE=0.063IN; YELLOW; PHOSPHOR BRONZE WIRE SILVER PLATE FINISH;	
41	TP21-TP28	-	8	5013	KEYSTONE	N/A	TEST POINT; PIN DIA=0.125IN; TOTAL LENGTH=0.445IN; BOARD HOLE=0.063IN; ORANGE; PHOSPHOR BRONZE WIRE SILVER PLATE FINISH;	
42	U1	-	1	MAX14912AKN+	MAXIM	MAX14912AKN+	IC; SWTC; OCTAL HIGH-SPEED; HIGH-SIDE SWITCH/PUSH-PULL DRIVER; TQFN56-EP	
43	U2	-	1	MAX16910CATA8/V+	MAXIM	MAX16910CATA8/V+	IC; VREG; EXPOSED PAD 0.2A, AUTOMOTIVE, ULTRA-LOW QUIESCENT CURRENT, LINEAR REGULATOR; TDFN8-EP 150MIL	
44	U3	-	1	93LC66BT-I/OT	MICROCHIP	93LC66BT-I/OT	IC; EPROM; 4K MICROWIRE SERIAL EEPROM; SOT23-6	
45	U4	-	1	FT2232HL	FUTURE TECHNOLOGY DEVICES INTL LTD.	FT2232HL	IC; MMRY; DUAL HIGH SPEED USB TO MULTIPURPOSE UART/FIFO; LQFP64	
46	Y1	-	1	ABM7-12.000MHZ-D2Y-T	ABRACON	12MHZ	CRYSTAL; SMT ; 18PF; 12MHZ; +/-20PPM; +/-30PPM	
47	MICRO_USB_CABLE	DNI	1	AK67421-1-R	ASSMANN	AK67421-1-R	CONNECTOR; MALE; USB; USB2.0 MICRO CONNECTION CABLE; USB B MICRO MALE TO USB A MALE; STRAIGHT; 5PINS-4PINS	
48	SU12-SU20	DNI	9	SX1100-B	KYCON	SX1100-B	TEST POINT; JUMPER; STR; TOTAL LENGTH=0.24IN; BLACK; INSULATION=PBT;PHOSPHOR BRONZE CONTACT=GOLD PLATED	
49	C1	DNP	1	EEV-TG1H102M	PANASONIC	1000UF	CAPACITOR; SMT (CASE_K16); ALUMINUM-ELECTROLYTIC; 1000UF; 50V; TOL=20%; TG=-40 DEGC TO +125 DEGC	

50	D3-D10	DNP	8	STPS0560Z	ST MICROELECTRONICS	STPS0560Z	DIODE; SCH; SCHOTTKY RECTIFIER; SMT (SOD-123); PIV=60V; IF=0.5A	
51	R16-R18, R20-R22	DNP	6	CRCW060310K0FK; 9C06031A1002FK; ERJ-3EKF1002	VISHAY DALE/YAGEO PHICOMP/ PANASONIC	10K	RESISTOR; 0603; 10K; 1%; 100PPM; 0.10W; THICK FILM	

This document contains information considered proprietary, and shall not be reproduced wholly or in part, nor disclosed to others without specific written permission.

HARDWARE NAME:MAX14912_EVKIT_B

HARDWARE NUMBER:

ENGINEER: DESIGNER:

DATE: 12/15/2015 ODB++/GERBER: SILK_TOP

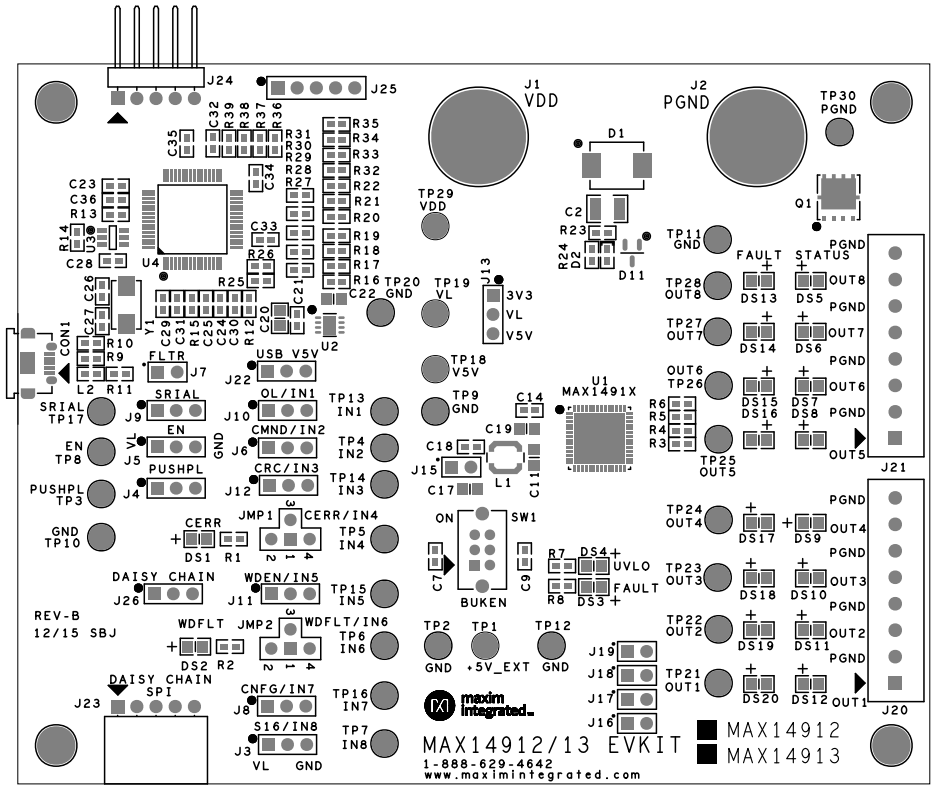

1"

maxim integrated™

This document contains information considered proprietary, and shall not be reproduced wholly or in part, nor disclosed to others without specific written permission.

HARDWARE NAME:MAX14912_EVKIT_B

HARDWARE NUMBER:

ENGINEER: DESIGNER:

DATE: 12/15/2015 ODB++/GERBER: TOP

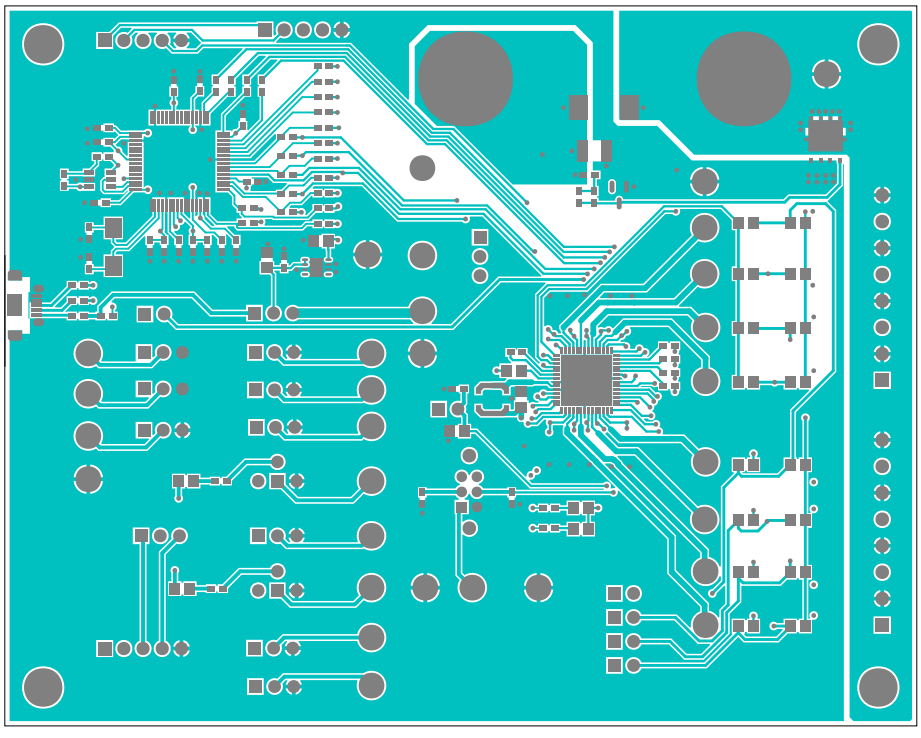

1"

maxim integrated™

This document contains information considered proprietary, and shall not be reproduced wholly or in part, nor disclosed to others without specific written permission.

HARDWARE NAME:MAX14912_EVKIT_B

HARDWARE NUMBER:

ENGINEER: DESIGNER:

DATE: 12/15/2015 ODB++/GERBER: LAYER2

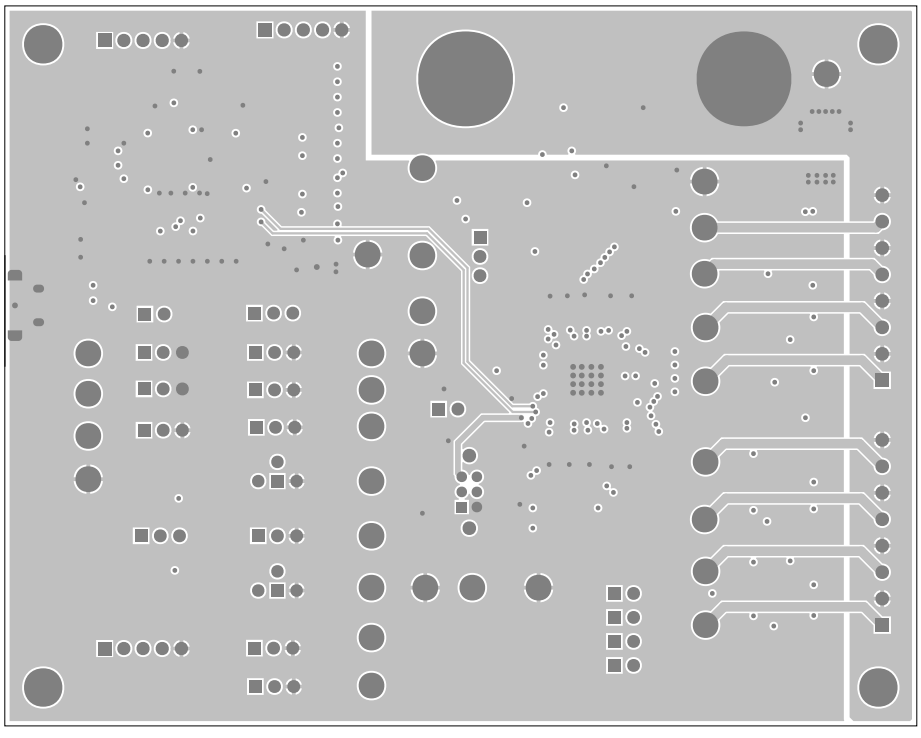

1"

maxim integrated™

This document contains information considered proprietary, and shall not be reproduced wholly or in part, nor disclosed to others without specific written permission.

HARDWARE NAME:MAX14912_EVKIT_B

HARDWARE NUMBER:

ENGINEER: DESIGNER:

DATE: 12/15/2015 ODB++/GERBER: LAYER3

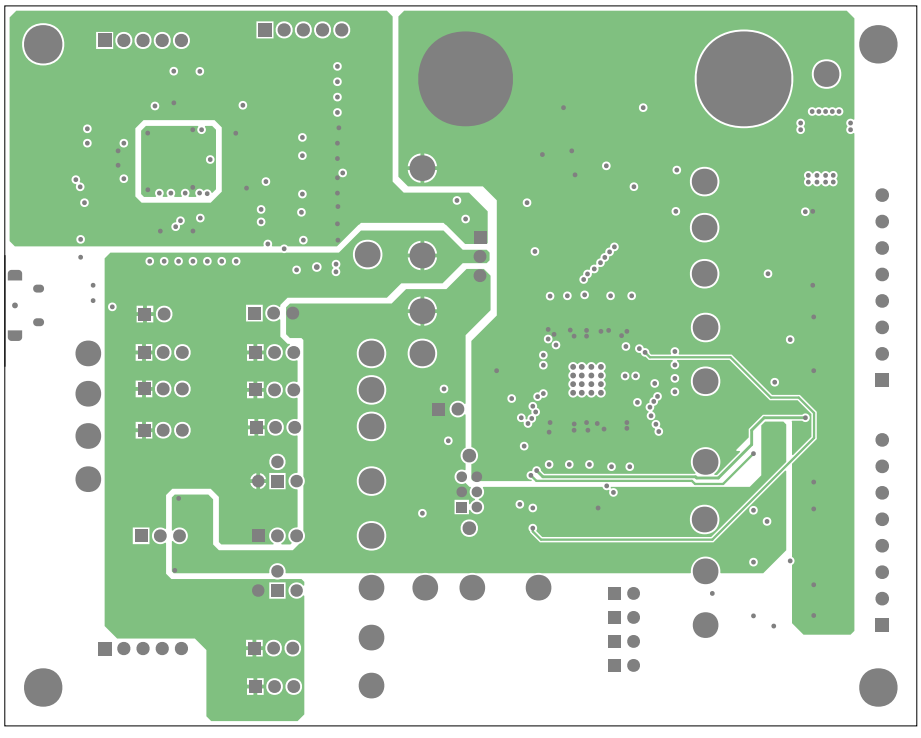

1"

maxim integrated™

This document contains information considered proprietary, and shall not be reproduced wholly or in part, nor disclosed to others without specific written permission.

HARDWARE NAME:MAX14912_EVKIT_B

HARDWARE NUMBER:

ENGINEER: DESIGNER:

DATE: 12/15/2015 ODB++/GERBER: BOTTOM

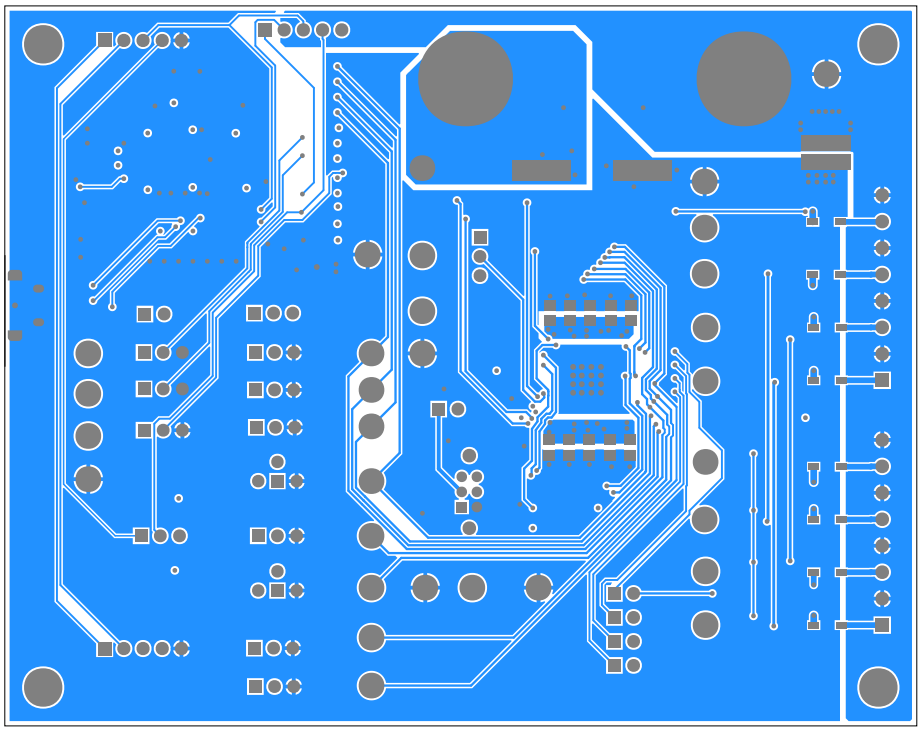

1"

maxim integrated™

This document contains information considered proprietary, and shall not be reproduced wholly or in part, nor disclosed to others without specific written permission.

HARDWARE NAME:MAX14912_EVKIT_B

HARDWARE NUMBER:

ENGINEER: DESIGNER:

DATE: 12/15/2015 ODB++/GERBER: SILK_BOT

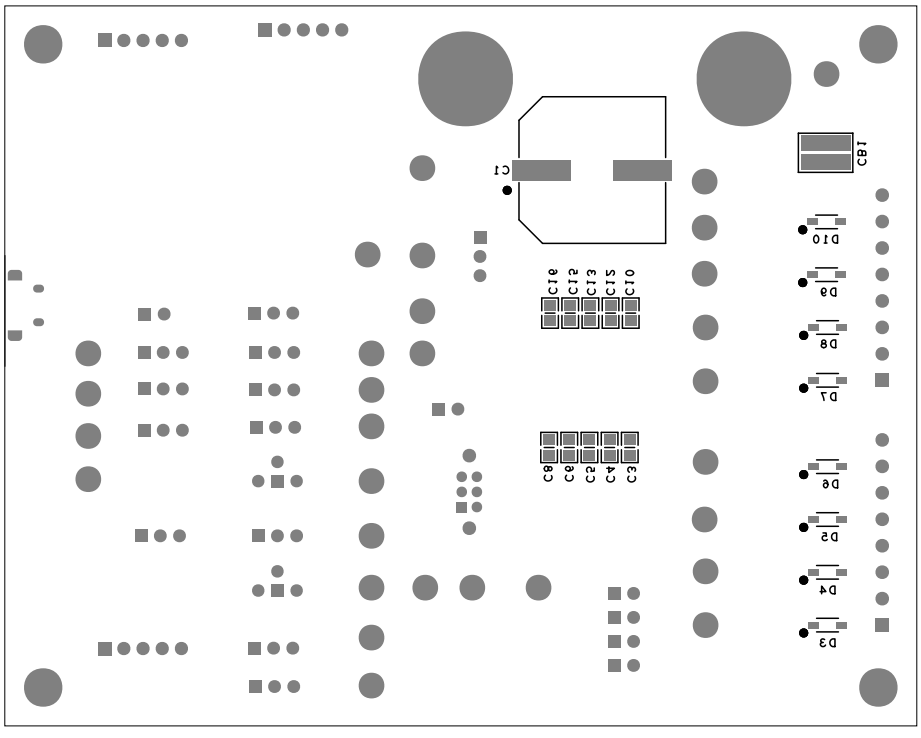

1"

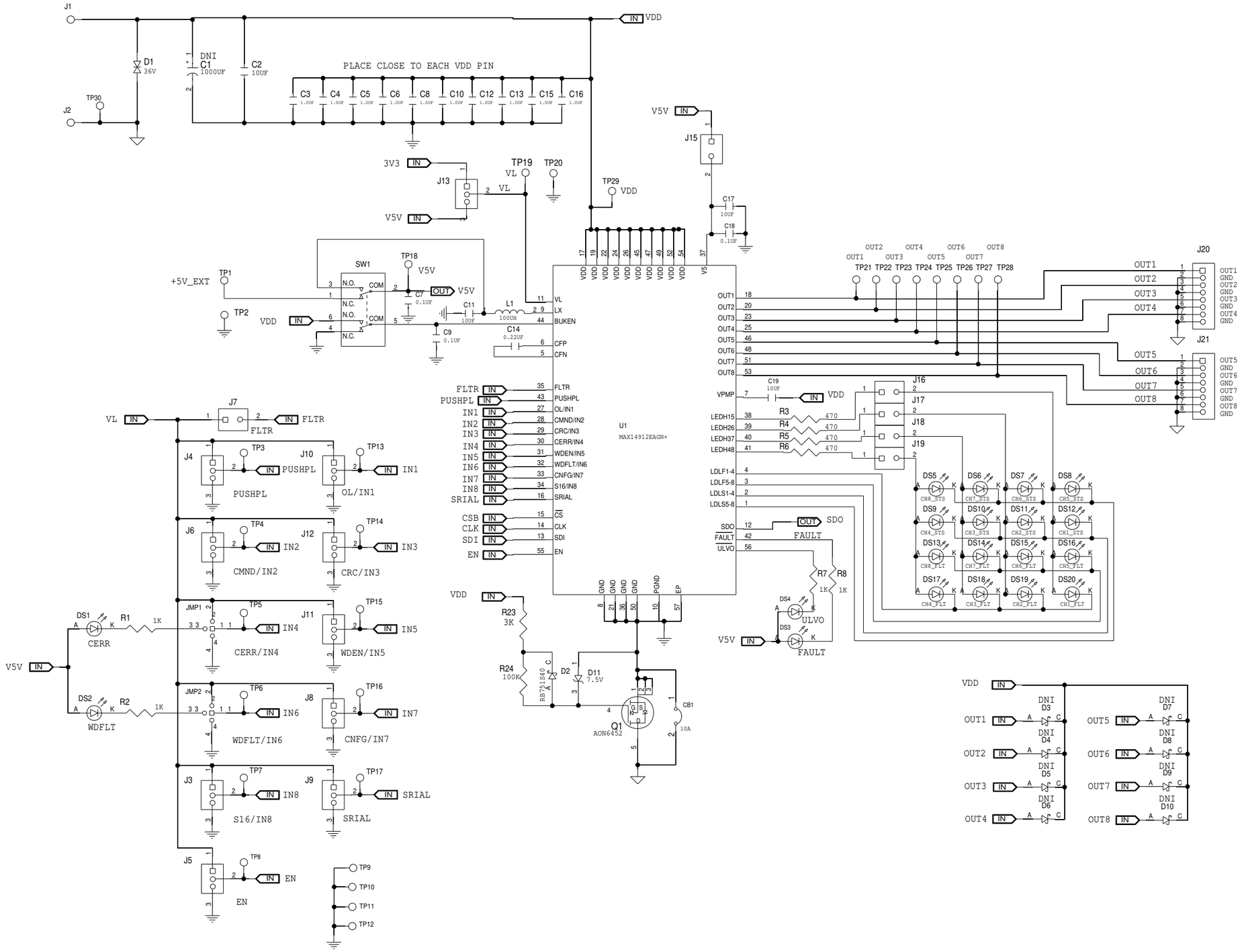

PROJECT TITLE: MAX14912 EVKIT		
DRAWING TITLE: DIGITAL OUTPUT DRIVER		
SIZE: C	HARDWARE NUMBER:	DATE: 12/07/15
ENGINEER:	DRAWN BY:	REV.: B
	TEMPLATE REV.: 1.5	SHEET 1 OF 2

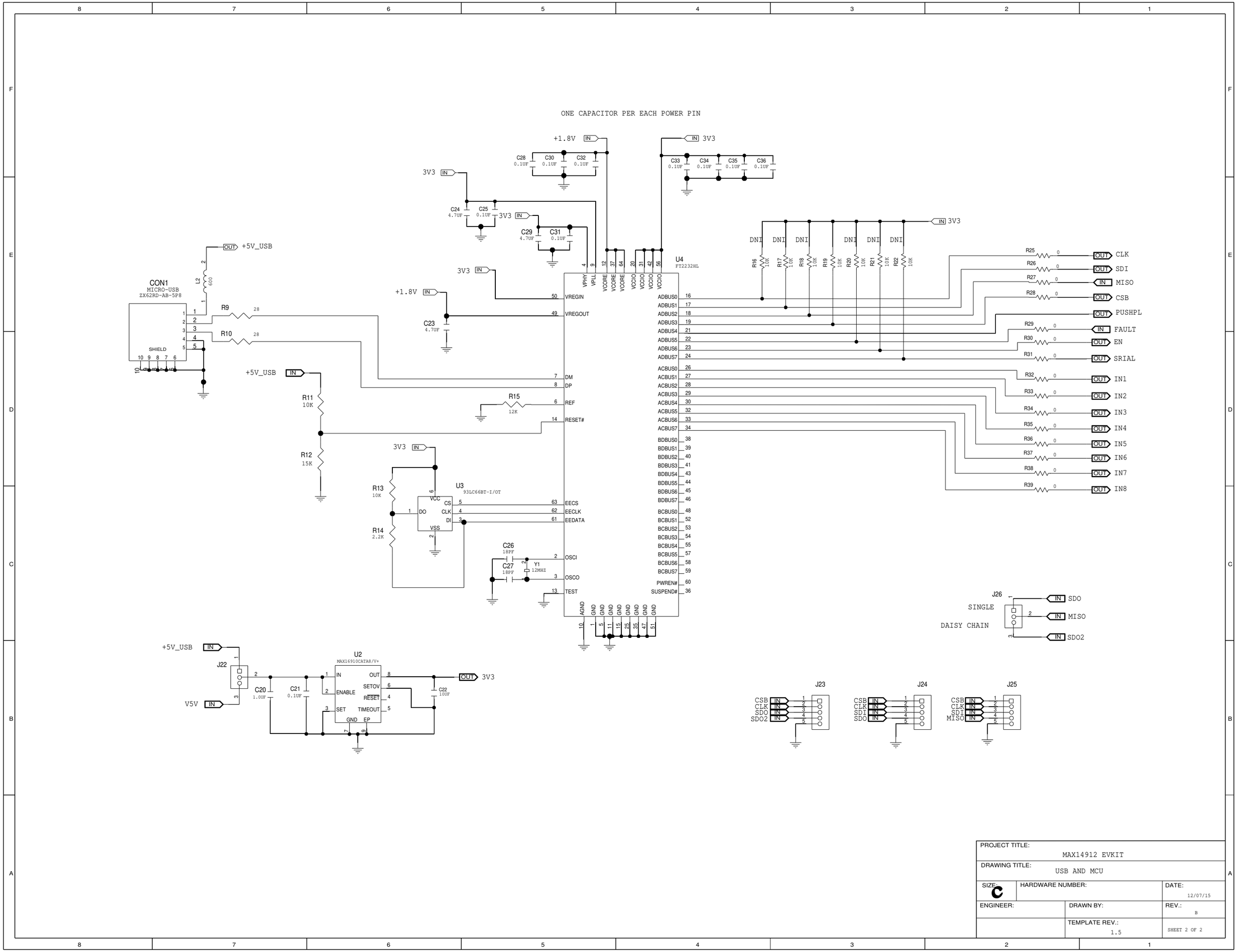

PROJECT TITLE: MAX14912 EVKIT		
DRAWING TITLE: USB AND MCU		
SIZE: C	HARDWARE NUMBER:	DATE: 12/07/15
ENGINEER:	DRAWN BY:	REV.: B
	TEMPLATE REV.: 1.5	SHEET 2 OF 2