Chipsmall Limited consists of a professional team with an average of over 10 year of expertise in the distribution of electronic components. Based in Hongkong, we have already established firm and mutual-benefit business relationships with customers from,Europe,America and south Asia,supplying obsolete and hard-to-find components to meet their specific needs.

With the principle of “Quality Parts,Customers Priority,Honest Operation,and Considerate Service”,our business mainly focus on the distribution of electronic components. Line cards we deal with include Microchip,ALPS,ROHM,Xilinx,Pulse,ON,Everlight and Freescale. Main products comprise IC,Modules,Potentiometer,IC Socket,Relay,Connector.Our parts cover such applications as commercial,industrial, and automotives areas.

We are looking forward to setting up business relationship with you and hope to provide you with the best service and solution. Let us make a better world for our industry!

Contact us

Tel: +86-755-8981 8866 Fax: +86-755-8427 6832
Email & Skype: info@chipsmall.com Web: www.chipsmall.com
Address: A1208, Overseas Decoration Building, #122 Zhenhua RD., Futian, Shenzhen, China

PART NUMBER		"T" RECOMMENDED
MB–1–156	MB–1–187	1/32–3/32 (0.8–2.4)
MB–3–156	MB–3–187	3/32–5/32 (2.4–4.0)
MB–5–156	MB–5–187	5/32–7/32 (4.0–5.6)
MB–7–156	MB–7–187	7/32–9/32 (5.6–7.1)
MB–9–156	MB–9–187	9/32–11/32 (7.1–8.7)
MB–11–156	MB–11–187	11/32–13/32 (8.7–10.3)
MB–13–156	MB–13–187	13/32–15/32 (10.3–11.9)
MB–15–156	MB–15–187	15/32–17/32 (11.9–13.5)
MB–17–156	MB–17–187	17/32–19/32 (13.5–15.1)

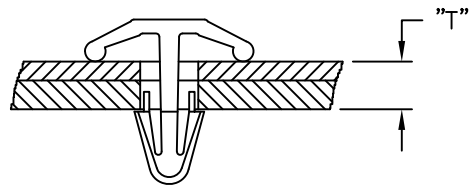

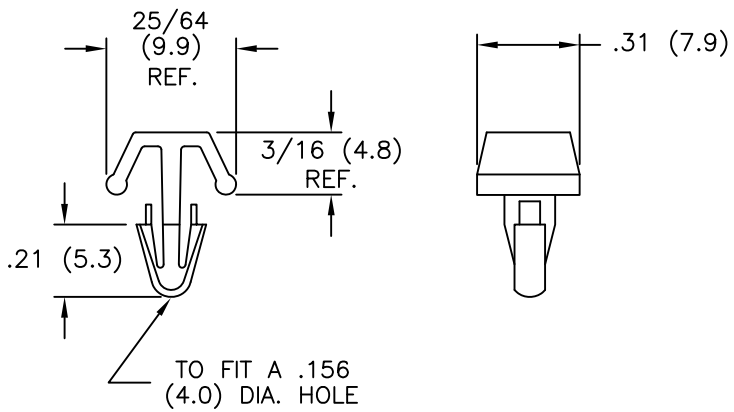

P/N MB–156

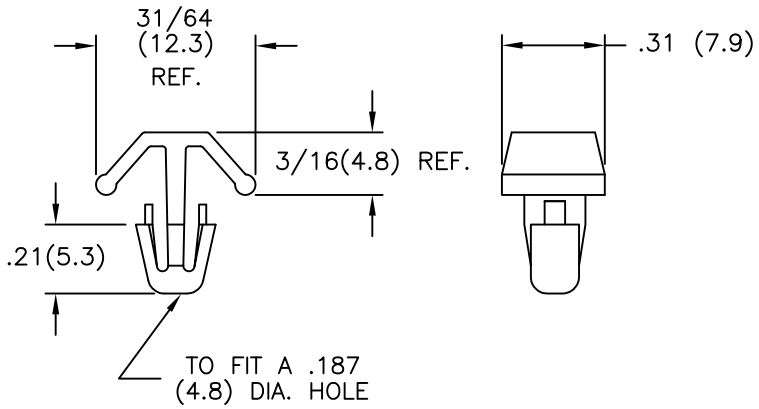

P/N MB–187

NOTES:
1. MATERIAL: NYLON 6/6 (RMS–01).
   FLAME RETARDANT, NYLON (RMS–19),
   AVAILABLE BY SPECIAL ORDER ONLY.
2. COLOR: NATURAL.

REV	DESCRIPTION	ENGR DATE
E	SEE CO 200191 FOR CHANGES	SK 05.23.08
D	SEE CO 200154 FOR CHANGES	SK 04.07.08
C	CHANGED FILE NO. AND TITLE BLOCK	SM 05.17.01
B	MAT'L RMS–19 ADDED.	J.L. 7.9.98
A	CHANGED CHART TO PANEL RANGE	JB 08.15.96

TITLE: MOUNTING BUTTON

DWG IN IN (MM)

TOLERANCES UNLESS NOTED
.XX=±.010
.XXX=±.005
FRAC=±1/64
ANG=±1°

FILE # MB
MAT'L: SEE NOTES
RE: RICHCO, INC.

DWN: R.S. APP:
DT: 11–10–93 DT:

RICHCO INC.
PO BOX 804238,CHICAGO,60680
(773) 539–4060

FINAL

PART # SEE TABLE

PRINT TYPE CA