Chipsmall Limited consists of a professional team with an average of over 10 year of expertise in the distribution of electronic components. Based in Hongkong, we have already established firm and mutual-benefit business relationships with customers from,Europe,America and south Asia,supplying obsolete and hard-to-find components to meet their specific needs.

With the principle of “Quality Parts,Customers Priority,Honest Operation,and Considerate Service”,our business mainly focus on the distribution of electronic components. Line cards we deal with include Microchip,ALPS,ROHM,Xilinx,Pulse,ON,Everlight and Freescale. Main products comprise IC,Modules,Potentiometer,IC Socket,Relay,Connector.Our parts cover such applications as commercial,industrial, and automotives areas.

We are looking forward to setting up business relationship with you and hope to provide you with the best service and solution. Let us make a better world for our industry!

Contact us

Tel: +86-755-8981 8866 Fax: +86-755-8427 6832
Email & Skype: info@chipsmall.com Web: www.chipsmall.com
Address: A1208, Overseas Decoration Building, #122 Zhenhua RD., Futian, Shenzhen, China

MB9A130LB Series

32-Bit ARM® Cortex® - M3 FM3 Microcontroller

The MB9A130LB Series are highly integrated 32-bit microcontrollers that dedicated for embedded controllers with low-power consumption mode and competitive cost.
The MB9A130LB Series are based on the ARM® Cortex®-M3 Processor with on-chip Flash memory and SRAM, and has peripheral functions such as Motor Control Timers, ADCs and Communication Interfaces (UART, CSIO, I^2C).

The products which are described in this data sheet are placed into TYPE3 product categories in FM3 Family Peripheral Manual.

Features

32-bit ARM® Cortex®-M3 Core

- Processor version: r2p1
- Up to 20MHz Operation Frequency
- Integrated Nested Vectored Interrupt Controller (NVIC): 1 channel NMI (non-maskable interrupt) and 32 channels' peripheral interrupts and 8 priority levels
- 24-bit System timer (Sys Tick): System timer for OS task management

On-chip Memories

[Flash memory]

- Up to 128 Kbytes
- Read cycle: 0 wait-cycle
- Security function for code protection

[SRAM]

This series contains 8 Kbyte on-chip SRAM that is connected to System bus of Cortex-M3 core.

- SRAM1: 8 Kbytes

Multi-function Serial Interface (Max 8channels)

Operation mode is selectable from the followings for each channel.

- UART
- CSIO
- I^2C

[UART]

- Full-duplex double buffer
- Selection with or without parity supported
- Built-in dedicated baud rate generator
- External clock available as a serial clock
- Various error detection functions available (parity errors, framing errors, and overrun errors)

[CSIO]

- Full-duplex double buffer
- Built-in dedicated baud rate generator
- Overrun error detection function available

[I^2C]

Standard-mode (Max 100 kbps) / Fast-mode (Max 400 kbps) supported

A/D Converter (Max 8channels)

[12-bit A/D Converter]

- Successive Approximation type
- Conversion time: Min. 1.0 µs
- Priority conversion available (priority at 2 levels)
- Scanning conversion mode
- Built-in FIFO for conversion data storage (for SCAN conversion: 16 steps, for Priority conversion: 4 steps)

Base Timer (Max 8channels)

Operation mode is selectable from the followings for each channel.

- 16-bit PWM timer
- 16-bit PPG timer
- 16-/32-bit reload timer
- 16-/32-bit PWC timer

General Purpose I/O Port

This series can use its pins as general purpose I/O ports when they are not used for peripherals. Moreover, the port relocate function is built in. It can set which I/O port the peripheral function can be allocated.

- Capable of pull-up control per pin
- Capable of reading pin level directly
- Built-in the port relocate function
- Up to 52 fast general purpose I/O Ports@64 pin Package
- Some pins are 5V tolerant I/O
  See List of Pin Functions and I/O Circuit Type to confirm the corresponding pins.

Multi-function Timer

The Multi-function timer is composed of the following blocks.

- 16-bit free-run timer × 3ch.
- Input capture × 4ch.
- Output compare × 6ch.
- A/D activation compare × 1ch.
- Waveform generator × 3ch.
- 16-bit PPG timer × 3ch.

The following function can be used to achieve the motor control.

- PWM signal output function
- DC chopper waveform output function
- Dead time function
- Input capture function
- A/D convertor activate function
- DTIF (Motor emergency stop) interrupt function

Real-time clock (RTC)

The Real-time clock can count Year/Month/Day/Hour/Minute/Second/A day of the week from 01 to 99.

- Interrupt function with specifying date and time (Year/Month/Day/Hour/Minute/Second/A day of the week.) is available. This function is also available by specifying only Year, Month, Day, Hour or Minute.
- Timer interrupt function after set time or each set time.
- Capable of rewriting the time with continuing the time count.
- Leap year automatic count is available.

External Interrupt Controller Unit

- Up to 8 external interrupt input pins
- Include one non-maskable interrupt (NMI) input pin

Watchdog Timer (2channels)

A watchdog timer can generate interrupts or a reset when a time-out value is reached.

This series consists of two different watchdogs, a Hardware watchdog and a Software watchdog.

Hardware watchdog timer is clocked by built-in Low-speed CR oscillator. Therefore, Hardware watchdog is active in any low power consumption mode except RTC and Stop and Deep Standby RTC and Deep Standby Stop modes.

Clock and Reset

[Clocks]

Five clock sources (2 external oscillators, 2 built-in CR oscillators, and Main PLL) that are dynamically selectable.

- Main Clock : 4 MHz to 20 MHz
- Sub Clock : 32.768 kHz
- Built-in High-speed CR Clock : 4 MHz
- Built-in Low-speed CR Clock : 100 kHz
- Main PLL Clock

[Resets]

- Reset requests from INITX pin
- Power on reset
- Software reset
- Watchdog timers reset
- Low voltage detector reset
- Clock supervisor reset

Clock Super Visor (CSV)

Clocks generated by built-in CR oscillators are used to supervise abnormality of the external clocks.

- If external clock failure (clock stop) is detected, reset is asserted.
- If external frequency anomaly is detected, interrupt or reset is asserted.

Low Voltage Detector (LVD)

This Series include 2-stage monitoring of voltage on the VCC. When the voltage falls below the voltage has been set, Low Voltage Detector generates an interrupt or reset.

- LVD1: error reporting via interrupt
- LVD2: auto-reset operation

Low Power Consumption Mode
Six low power consumption modes supported.

- Sleep
- Timer
- RTC
- Stop
- Deep Standby RTC
- Deep Standby Stop

Back up register is 16 bytes.

Debug
Serial Wire JTAG Debug Port (SWJ-DP)

Power Supply
Wide range voltage : VCC = 1.8 V to 5.5 V

Contents

1. Product Lineup **6**
2. Packages **7**
3. Pin Assignment **8**
4. List of Pin Functions **12**
5. I/O Circuit Type **25**
6. Handling Precautions **30**
6.1 Precautions for Product Design 30
6.2 Precautions for Package Mounting 31
6.3 Precautions for Use Environment 32
7. Handling Devices **33**
8. Block Diagram **35**
9. Memory Size **36**
10. Memory Map **36**
11. Pin Status in Each CPU State **39**
12. Electrical Characteristics **45**
12.1 Absolute Maximum Ratings 45
12.2 Recommended Operating Conditions 46
12.3 DC Characteristics 47
12.3.1 Current Rating 47
12.3.2 Pin Characteristics 50
12.4 AC Characteristics 51
12.4.1 Main Clock Input Characteristics 51
12.4.2 Sub Clock Input Characteristics 52
12.4.3 Built-in CR Oscillation Characteristics 52
12.4.4 Operating Conditions of Main PLL (In the case of using main clock for input of PLL) 53
12.4.5 Operating Conditions of Main PLL (In the case of using built-in High-speed CR clock for input clock of Main PLL) 53
12.4.6 Reset Input Characteristics 54
12.4.7 Power-on Reset Timing 54
12.4.8 Base Timer Input Timing 55
12.4.9 CSIO/UART Timing 56
12.4.10 External Input Timing 64
12.4.11 I^2C Timing 65
12.4.12 JTAG Timing 66
12.5 12-bit A/D Converter 67
12.6 Low-Voltage Detection Characteristics 70
12.6.1 Low-Voltage Detection Reset 70
12.6.2 Interrupt of Low-voltage Detection 71
12.7 Flash Memory Write/Erase Characteristics 73
12.7.1 Write / Erase time 73
12.7.2 Write cycles and data hold time 73
12.8 Return Time from Low-Power Consumption Mode 74
12.8.1 Return Factor: Interrupt/WKUP 74
12.8.2 Return Factor: Reset 76

13. Ordering Information 78
14. Package Dimensions 79
15. Major Changes 84
Document History 85

1. Product Lineup

Memory size

Product name		MB9AF131KB/LB	MB9AF132KB/LB
On-chip Flash		64 Kbytes	128 Kbytes
On-chip SRAM	SRAM1	8 Kbytes	8 Kbytes

Function

Product name			MB9AF131KB MB9AF132KB	MB9AF131LB MB9AF132LB
Pin count			48	64
CPU			Cortex-M3	
	Freq.		20 MHz	
Power supply voltage range			1.8 V to 5.5 V	
MF Serial Interface (UART/CSIO/I^2C)			4ch. (Max) (CSIO and I^2C is Max 3ch.)	8ch. (Max)
Base Timer (PWC/ Reload timer/PWM/PPG)			8ch. (Max)	
MF-Timer	A/D activation compare	1ch.	1 unit (Max)	
	Input capture	4ch.		
	Free-run timer	3ch.		
	Output compare	6ch.		
	Waveform generator	3ch.		
	PPG	3ch.		
Real-time clock			1 unit	
Watchdog timer			1ch. (SW) + 1ch. (HW)	
External Interrupts			6 pins (Max) + NMI × 1	8 pins (Max) + NMI × 1
general purpose I/O ports			37 pins (Max)	52 pins (Max)
12-bit A/D converter			6ch. (1 unit)	8ch. (1 unit)
CSV (Clock Super Visor)			Yes	
LVD (Low Voltage Detector)			2ch.	
Built-in CR	High-speed		4 MHz	
	Low-speed		100 kHz	
Debug Function			SWJ-DP	

Note: All signals of the peripheral function in each product cannot be allocated by limiting the pins of package. It is necessary to use the port relocate function of the I/O port according to your function use.
See Electrical Characteristics (12.4) AC Characteristics (12.4.3) Built-in CR Oscillation Characteristics for accuracy of built-in CR.

2. Packages

Package \ Product name		MB9AF131KB MB9AF132KB	MB9AF131LB MB9AF132LB
LQFP:	FPT-48P-M49 (0.5mm pitch)	❍	-
QFN:	LCC-48P-M73	❍	-
LQFP:	FPT-64P-M38 (0.5mm pitch)	-	❍
LQFP:	FPT-64P-M39 (0.65mm pitch)	-	❍
QFN:	LCC-64P-M24	-	❍

❍: Supported

Note : See Package Dimensions for detailed information on each package.

3. Pin Assignment

FPT-48P-M49

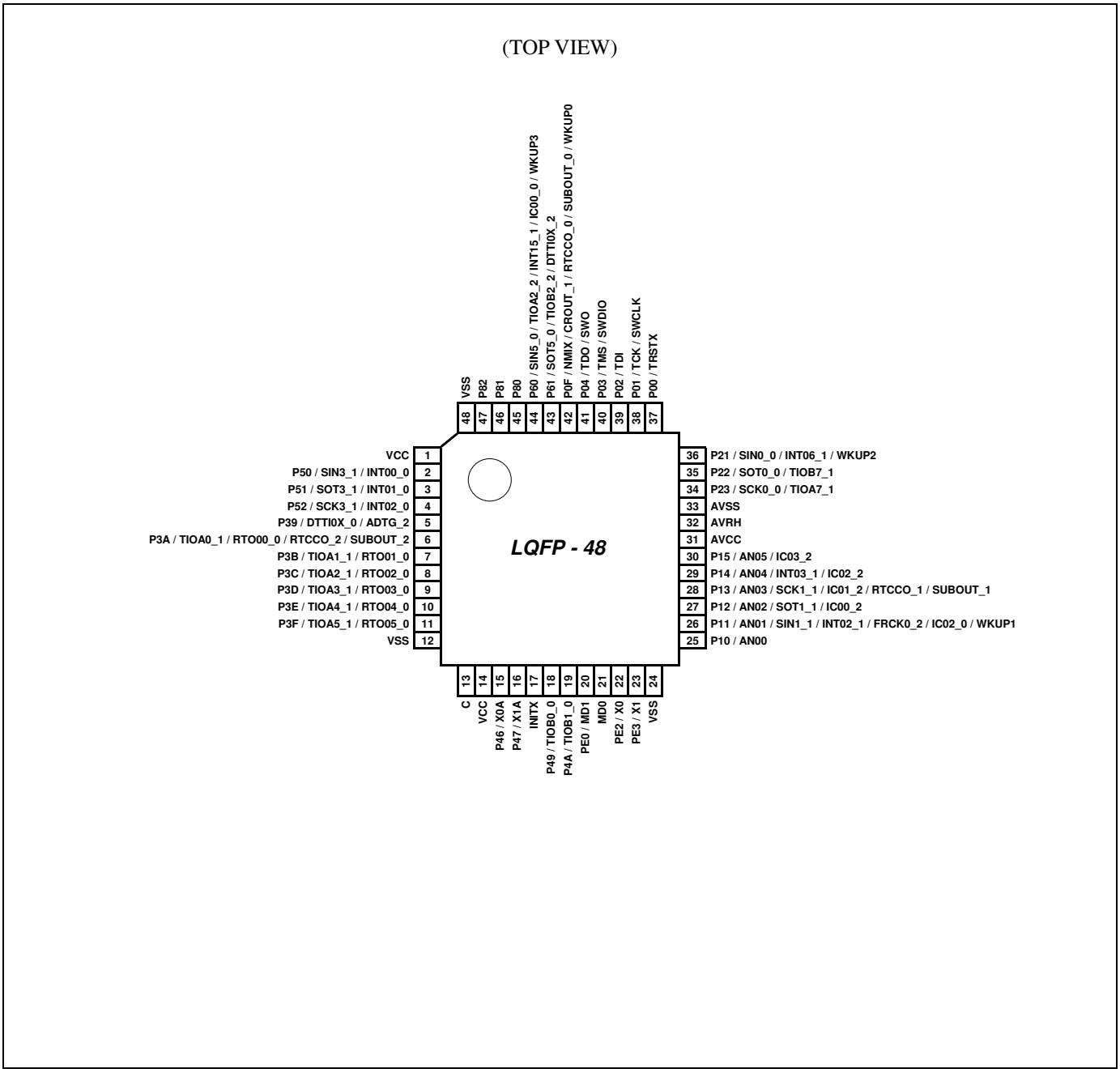

Note:

The number after the underscore ("_") in pin names such as XXX_1 and XXX_2 indicates the relocated port number. For these pins, there are multiple pins that provide the same function for the same channel. Use the extended port function register (EPFR) to select the pin.

LCC-48P-M73

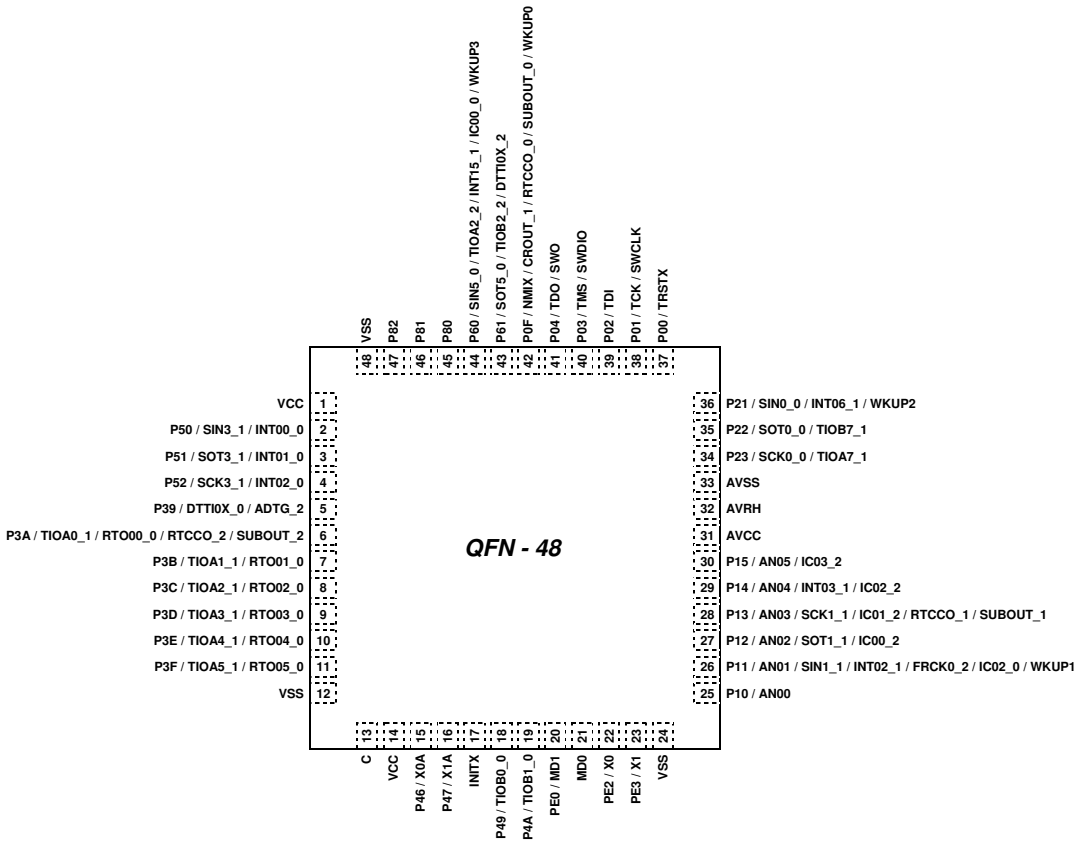

Note:

The number after the underscore ("_") in pin names such as XXX_1 and XXX_2 indicates the relocated port number. For these pins, there are multiple pins that provide the same function for the same channel. Use the extended port function register (EPFR) to select the pin.

FPT-64P-M38/M39

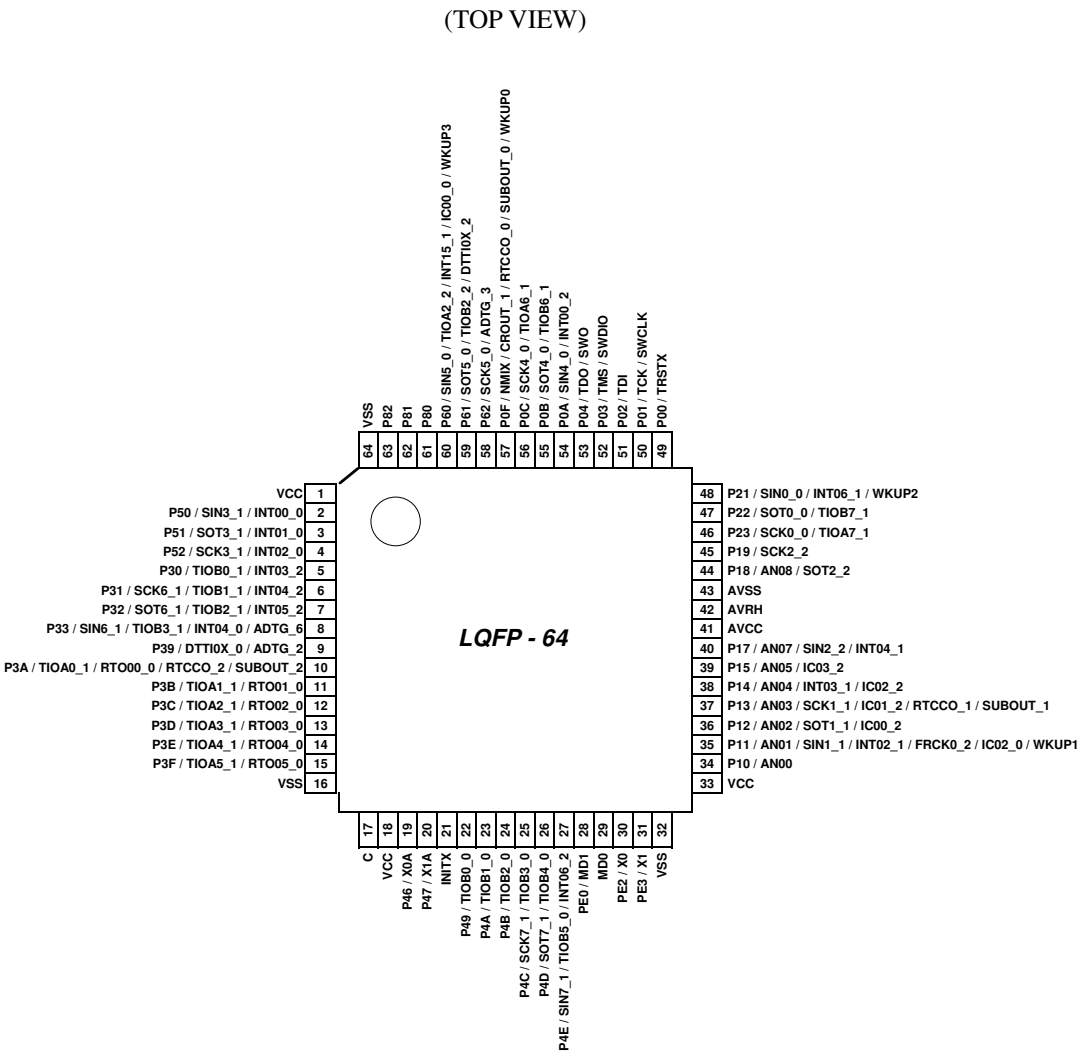

Note:

The number after the underscore ("_") in pin names such as XXX_1 and XXX_2 indicates the relocated port number. For these pins, there are multiple pins that provide the same function for the same channel. Use the extended port function register (EPFR) to select the pin.

LCC-64P-M24

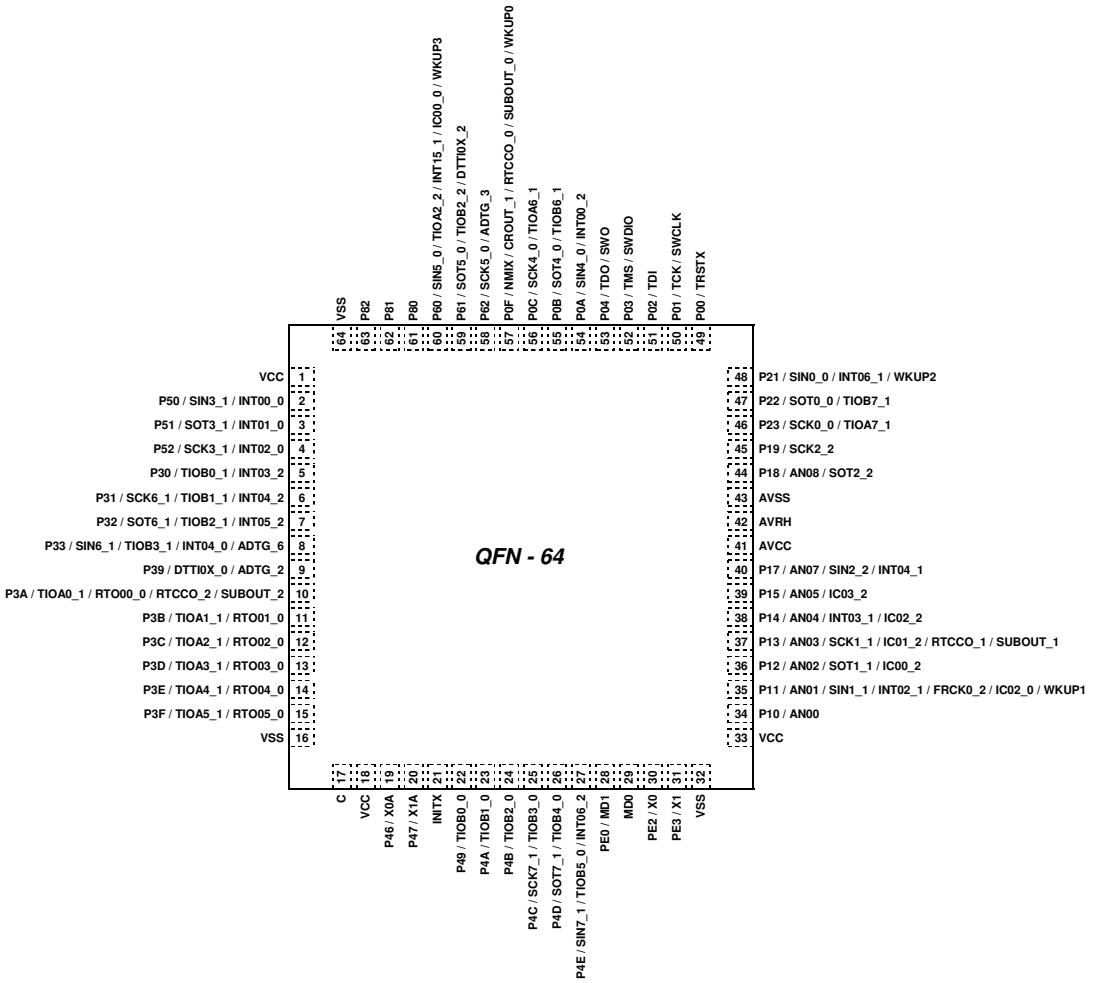

Note

The number after the underscore ("_") in pin names such as XXX_1 and XXX_2 indicates the relocated port number. For these pins, there are multiple pins that provide the same function for the same channel. Use the extended port function register (EPFR) to select the pin.

4. List of Pin Functions

List of pin numbers

The number after the underscore ("_") in pin names such as XXX_1 and XXX_2 indicates the relocated port number. For these pins, there are multiple pins that provide the same function for the same channel. Use the extended port function register (EPFR) to select the pin.

Pin No		Pin name	I/O circuit type	Pin state type
LQFP-64 QFN-64	LQFP-48 QFN-48			
1	1	VCC	-	
2	2	P50	G	F
		INT00_0		
		SIN3_1		
3	3	P51	G	F
		INT01_0		
		SOT3_1 (SDA3_1)		
4	4	P52	G	F
		INT02_0		
		SCK3_1 (SCL3_1)		
5	-	P30	E	F
		TIOB0_1		
		INT03_2		
6	-	P31	E	F
		TIOB1_1		
		SCK6_1 (SCL6_1)		
		INT04_2		
7	-	P32	E	F
		TIOB2_1		
		SOT6_1 (SDA6_1)		
		INT05_2		
8	-	P33	E	F
		INT04_0		
		TIOB3_1		
		SIN6_1		
		ADTG_6		
9	5	P39	E	H
		DTTI0X_0		
		ADTG_2		
10	6	P3A	E	H
		RTO00_0 (PPG00_0)		
		TIOA0_1		
		RTCCO_2		
		SUBOUT_2		

Pin No		Pin name	I/O circuit type	Pin state type
LQFP-64 QFN-64	LQFP-48 QFN-48			
11	7	P3B	E	H
		RTO01_0 (PPG00_0)		
		TIOA1_1		
12	8	P3C	E	H
		RTO02_0 (PPG02_0)		
		TIOA2_1		
13	9	P3D	E	H
		RTO03_0 (PPG02_0)		
		TIOA3_1		
14	10	P3E	E	H
		RTO04_0 (PPG04_0)		
		TIOA4_1		
15	11	P3F	E	H
		RTO05_0 (PPG04_0)		
		TIOA5_1		
16	12	VSS	-	
17	13	C	-	
18	14	VCC	-	
19	15	P46	D	M
		X0A		
20	16	P47	D	N
		X1A		
21	17	INITX	B	C
22	18	P49	E	H
		TIOB0_0		
23	19	P4A	E	H
		TIOB1_0		
24	-	P4B	E	H
		TIOB2_0		

Pin No		Pin name	I/O circuit type	Pin state type
LQFP-64 QFN-64	LQFP-48 QFN-48			
25	-	P4C	E	H
		TIOB3_0		
		SCK7_1 (SCL7_1)		
26	-	P4D	E	H
		TIOB4_0		
		SOT7_1 (SDA7_1)		
27	-	P4E	E	F
		TIOB5_0		
		INT06_2		
		SIN7_1		
28	20	PE0	C	P
		MD1		
29	21	MD0	H	D
30	22	PE2	A	A
		X0		
31	23	PE3	A	B
		X1		
32	24	VSS	-	
33	-	VCC	-	
34	25	P10	F	J
		AN00		
35	26	P11	F	L
		AN01		
		SIN1_1		
		INT02_1		
		FRCK0_2		
		IC02_0		
		WKUP1		
36	27	P12	F	J
		AN02		
		SOT1_1 (SDA1_1)		
		IC00_2		
37	28	P13	F	J
		AN03		
		SCK1_1 (SCL1_1)		
		IC01_2		
		RTCCO_1		
		SUBOUT_1		

Pin No		Pin name	I/O circuit type	Pin state type
LQFP-64 QFN-64	LQFP-48 QFN-48			
38	29	P14	F	K
		AN04		
		INT03_1		
		IC02_2		
39	30	P15	F	J
		AN05		
		IC03_2		
40	-	P17	F	K
		AN07		
		SIN2_2		
		INT04_1		
41	31	AVCC	-	
42	32	AVRH	-	
43	33	AVSS	-	
44	-	P18	F	J
		AN08		
		SOT2_2 (SDA2_2)		
45	-	P19	E	H
		SCK2_2 (SCL2_2)		
46	34	P23	G	H
		SCK0_0 (SCL0_0)		
		TIOA7_1		
47	35	P22	G	H
		SOT0_0 (SDA0_0)		
		TIOB7_1		
48	36	P21	G	G
		SIN0_0		
		INT06_1		
		WKUP2		
49	37	P00	E	E
		TRSTX		
50	38	P01	E	E
		TCK		
		SWCLK		
51	39	P02	E	E
		TDI		

Pin No		Pin name	I/O circuit type	Pin state type
LQFP-64 QFN-64	LQFP-48 QFN-48			
52	40	P03	E	E
		TMS		
		SWDIO		
53	41	P04	E	E
		TDO		
		SWO		
54	-	P0A	E	F
		SIN4_0		
		INT00_2		
55	-	P0B	E	H
		SOT4_0 (SDA4_0)		
		TIOB6_1		
56	-	P0C	E	H
		SCK4_0 (SCL4_0)		
		TIOA6_1		
57	42	P0F	E	I
		NMIX		
		CROUT_1		
		RTCCO_0		
		SUBOUT_0		
		WKUP0		
58	-	P62	I	H
		SCK5_0 (SCL5_0)		
		ADTG_3		
59	43	P61	I	H
		SOT5_0 (SDA5_0)		
		TIOB2_2		
		DTTI0X_2		
60	44	P60	I	G
		SIN5_0		
		TIOA2_2		
		INT15_1		
		IC00_0		
		WKUP3		
61	45	P80	G	O
62	46	P81	G	O
63	47	P82	G	O
64	48	VSS	-	

List of pin functions

The number after the underscore ("_") in pin names such as XXX_1 and XXX_2 indicates the relocated port number. For these pins, there are multiple pins that provide the same function for the same channel. Use the extended port function register (EPFR) to select the pin.

Pin function	Pin name	Function description	Pin No	
			LQFP-64 QFN-64	LQFP-48 QFN-48
ADC	ADTG_2	A/D converter external trigger input pin	9	5
	ADTG_3		58	-
	ADTG_6		8	-
	AN00	A/D converter analog input pin. ANxx describes ADC ch.xx.	34	25
	AN01		35	26
	AN02		36	27
	AN03		37	28
	AN04		38	29
	AN05		39	30
	AN07		40	-
	AN08		44	-
Base Timer 0	TIOA0_1	Base timer ch.0 TIOA pin	10	6
	TIOB0_0	Base timer ch.0 TIOB pin	22	18
	TIOB0_1		5	-
Base Timer 1	TIOA1_1	Base timer ch.1 TIOA pin	11	7
	TIOB1_0	Base timer ch.1 TIOB pin	23	19
	TIOB1_1		6	-
Base Timer 2	TIOA2_1	Base timer ch.2 TIOA pin	12	8
	TIOA2_2		60	44
	TIOB2_0	Base timer ch.2 TIOB pin	24	-
	TIOB2_1		7	-
	TIOB2_2		59	43
Base Timer 3	TIOA3_1	Base timer ch.3 TIOA pin	13	9
	TIOB3_0	Base timer ch.3 TIOB pin	25	-
	TIOB3_1		8	-
Base Timer 4	TIOA4_1	Base timer ch.4 TIOA pin	14	10
	TIOB4_0	Base timer ch.4 TIOB pin	26	-
Base Timer 5	TIOA5_1	Base timer ch.5 TIOA pin	15	11
	TIOB5_0	Base timer ch.5 TIOB pin	27	-
Base Timer 6	TIOA6_1	Base timer ch.6 TIOA pin	56	-
	TIOB6_1	Base timer ch.6 TIOB pin	55	-
Base Timer 7	TIOA7_1	Base timer ch.7 TIOA pin	46	34
	TIOB7_1	Base timer ch.7 TIOB pin	47	35
Debugger	SWCLK	Serial wire debug interface clock input pin	50	38
	SWDIO	Serial wire debug interface data input / output pin	52	40
	SWO	Serial wire viewer output pin	53	41
	TRSTX	J-TAG reset Input pin	49	37
	TCK	J-TAG test clock input pin	50	38
	TDI	J-TAG test data input pin	51	39
	TMS	J-TAG test mode state input/output pin	52	40
	TDO	J-TAG debug data output pin	53	41

Pin function	Pin name	Function description	Pin No	
			LQFP-64 QFN-64	LQFP-48 QFN-48
External Interrupt	INT00_0	External interrupt request 00 input pin	2	2
	INT00_2		54	-
	INT01_0	External interrupt request 01 input pin	3	3
	INT02_0	External interrupt request 02 input pin	4	4
	INT02_1		35	26
	INT03_1	External interrupt request 03 input pin	38	29
	INT03_2		5	-
	INT04_0	External interrupt request 04 input pin	8	-
	INT04_1		40	-
	INT04_2		6	-
	INT05_2	External interrupt request 05 input pin	7	-
	INT06_1	External interrupt request 06 input pin	48	36
	INT06_2		27	-
	INIT15_1	External interrupt request 15 input pin	60	44
	NMIX	Non-Maskable Interrupt input pin	57	42
GPIO	P00	General-purpose I/O port 0	49	37
	P01		50	38
	P02		51	39
	P03		52	40
	P04		53	41
	P0A		54	-
	P0B		55	-
	P0C		56	-
	P0F		57	42
	P10	General-purpose I/O port 1	34	25
	P11		35	26
	P12		36	27
	P13		37	28
	P14		38	29
	P15		39	30
	P17		40	-
	P18		44	-
	P19		45	-
	P21	General-purpose I/O port 2	48	36
	P22		47	35
	P23		46	34

Pin function	Pin name	Function description	Pin No	
			LQFP-64 QFN-64	LQFP-48 QFN-48
GPIO	P30	General-purpose I/O port 3	5	-
	P31		6	-
	P32		7	-
	P33		8	-
	P39		9	5
	P3A		10	6
	P3B		11	7
	P3C		12	8
	P3D		13	9
	P3E		14	10
	P3F		15	11
	P46	General-purpose I/O port 4	19	15
	P47		20	16
	P49		22	18
	P4A		23	19
	P4B		24	-
	P4C		25	-
	P4D		26	-
	P4E		27	-
	P50	General-purpose I/O port 5	2	2
	P51		3	3
	P52		4	4
	P60	General-purpose I/O port 6	60	44
	P61		59	43
	P62		58	-
	P80	General-purpose I/O port 8	61	45
	P81		62	46
	P82		63	47
	PE0	General-purpose I/O port E	28	20
	PE2		30	22
	PE3		31	23

Pin function	Pin name	Function description	Pin No	
			LQFP-64 QFN-64	LQFP-48 QFN-48
Multi-function Serial 0	SIN0_0	Multi-function serial interface ch.0 input pin	48	36
	SOT0_0 (SDA0_0)	Multi-function serial interface ch.0 output pin. This pin operates as SOT0 when it is used in a UART/CSIO (operation modes 0 to 2) and as SDA0 when it is used in an I^2C (operation mode 4).	47	35
	SCK0_0 (SCL0_0)	Multi-function serial interface ch.0 clock I/O pin. This pin operates as SCK0 when it is used in a UART/CSIO (operation modes 0 to 2) and as SCL0 when it is used in an I^2C (operation mode 4).	46	34
Multi-function Serial 1	SIN1_1	Multi-function serial interface ch.1 input pin	35	26
	SOT1_1 (SDA1_1)	Multi-function serial interface ch.1 output pin. This pin operates as SOT1 when it is used in a UART/CSIO (operation modes 0 to 2) and as SDA1 when it is used in an I^2C (operation mode 4).	36	27
	SCK1_1 (SCL1_1)	Multi-function serial interface ch.1 clock I/O pin. This pin operates as SCK1 when it is used in a UART/CSIO (operation modes 0 to 2) and as SCL1 when it is used in an I^2C (operation mode 4).	37	28
Multi-function Serial 2	SIN2_2	Multi-function serial interface ch.2 input pin	40	-
	SOT2_2 (SDA2_2)	Multi-function serial interface ch.2 output pin. This pin operates as SOT2 when it is used in a UART/CSIO (operation modes 0 to 2) and as SDA2 when it is used in an I^2C (operation mode 4).	44	-
	SCK2_2 (SCL2_2)	Multi-function serial interface ch.2 clock I/O pin. This pin operates as SCK2 when it is used in a UART/CSIO (operation modes 0 to 2) and as SCL2 when it is used in an I^2C (operation mode 4).	45	-

Pin function	Pin name	Function description	Pin No	
			LQFP-64 QFN-64	LQFP-48 QFN-48
Multi-function Serial 3	SIN3_1	Multi-function serial interface ch.3 input pin	2	2
	SOT3_1 (SDA3_1)	Multi-function serial interface ch.3 output pin. This pin operates as SOT3 when it is used in a UART/CSIO (operation modes 0 to 2) and as SDA3 when it is used in an I^2C (operation mode 4).	3	3
	SCK3_1 (SCL3_1)	Multi-function serial interface ch.3 clock I/O pin. This pin operates as SCK3 when it is used in a UART/CSIO (operation modes 0 to 2) and as SCL3 when it is used in an I^2C (operation mode 4).	4	4
Multi-function Serial 4	SIN4_0	Multi-function serial interface ch.4 input pin	54	-
	SOT4_0 (SDA4_0)	Multi-function serial interface ch.4 output pin. This pin operates as SOT4 when it is used in a UART/CSIO (operation modes 0 to 2) and as SDA4 when it is used in an I^2C (operation mode 4).	55	-
	SCK4_0 (SCL4_0)	Multi-function serial interface ch.4 clock I/O pin. This pin operates as SCK4 when it is used in a UART/CSIO (operation modes 0 to 2) and as SCL4 when it is used in an I^2C (operation mode 4).	56	-
Multi-function Serial 5	SIN5_0	Multi-function serial interface ch.5 input pin	60	44
	SOT5_0 (SDA5_0)	Multi-function serial interface ch.5 output pin. This pin operates as SOT5 when it is used in a UART/CSIO (operation modes 0 to 2) and as SDA5 when it is used in an I^2C (operation mode 4).	59	43
	SCK5_0 (SCL5_0)	Multi-function serial interface ch.5 clock I/O pin. This pin operates as SCK5 when it is used in a UART/CSIO (operation modes 0 to 2) and as SCL5 when it is used in an I^2C (operation mode 4).	58	-

Pin function	Pin name	Function description	Pin No	
			LQFP-64 QFN-64	LQFP-48 QFN-48
Multi-function Serial 6	SIN6_1	Multi-function serial interface ch.6 input pin	8	-
	SOT6_1 (SDA6_1)	Multi-function serial interface ch.6 output pin. This pin operates as SOT6 when it is used in a UART/CSIO (operation modes 0 to 2) and as SDA6 when it is used in an I^2C (operation mode 4).	7	-
	SCK6_1 (SCL6_1)	Multi-function serial interface ch.6 clock I/O pin. This pin operates as SCK6 when it is used in a UART/CSIO (operation modes 0 to 2) and as SCL6 when it is used in an I^2C (operation mode 4).	6	-
Multi-function Serial 7	SIN7_1	Multi-function serial interface ch.7 input pin	27	-
	SOT7_1 (SDA7_1)	Multi-function serial interface ch.7 output pin. This pin operates as SOT7 when it is used in a UART/CSIO (operation modes 0 to 2) and as SDA7 when it is used in an I^2C (operation mode 4).	26	-
	SCK7_1 (SCL7_1)	Multi-function serial interface ch.7 clock I/O pin. This pin operates as SCK7 when it is used in a UART/CSIO (operation modes 0 to 2) and as SCL7 when it is used in an I^2C (operation mode 4).	25	-

Pin function	Pin name	Function description	Pin No	
			LQFP-64 QFN-64	LQFP-48 QFN-48
Multi-function Timer 0	DTTI0X_0	Input signal of waveform generator to control outputs RTO00 to RTO05 of Multi-function timer 0	9	5
	DTTI0X_2		59	43
	FRCK0_2	16-bit free-run timer ch.0 external clock input pin	35	26
	IC00_0	16-bit input capture input pin of Multi-function timer 0. ICxx describes a channel number.	60	44
	IC00_2		36	27
	IC01_2		37	28
	IC02_0		35	26
	IC02_2		38	29
	IC03_2		39	30
	RTO00_0 (PPG00_0)	Waveform generator output pin of Multi-function timer 0. This pin operates as PPG00 when it is used in PPG0 output modes.	10	6
	RTO01_0 (PPG00_0)	Waveform generator output pin of Multi-function timer 0. This pin operates as PPG00 when it is used in PPG0 output modes.	11	7
	RTO02_0 (PPG02_0)	Waveform generator output pin of Multi-function timer 0. This pin operates as PPG02 when it is used in PPG0 output modes.	12	8
	RTO03_0 (PPG02_0)	Waveform generator output pin of Multi-function timer 0. This pin operates as PPG02 when it is used in PPG0 output modes.	13	9
	RTO04_0 (PPG04_0)	Waveform generator output pin of Multi-function timer 0. This pin operates as PPG04 when it is used in PPG0 output modes.	14	10
	RTO05_0 (PPG04_0)	Waveform generator output pin of Multi-function timer 0. This pin operates as PPG04 when it is used in PPG0 output modes.	15	11
Real-time clock	RTCCO_0	0.5 seconds pulse output pin of Real-time clock	57	42
	RTCCO_1		37	28
	RTCCO_2		10	6
	SUBOUT_0	Sub clock output pin	57	42
	SUBOUT_1		37	28
	SUBOUT_2		10	6
Low Power Consumption Mode	WKUP0	Deep stand-by mode return signal input pin 0	57	42
	WKUP1	Deep stand-by mode return signal input pin 1	35	26
	WKUP2	Deep stand-by mode return signal input pin 2	48	36
	WKUP3	Deep stand-by mode return signal input pin 3	60	44

Pin function	Pin name	Function description	Pin No	
			LQFP-64 QFN-64	LQFP-48 QFN-48
Reset	INITX	External Reset Input pin. A reset is valid when INITX = L.	21	17
Mode	MD0	Mode 0 pin. During normal operation, MD0 = L must be input During serial programming to flash memory, MD0 = H must be input.	29	21
	MD1	Mode 1 pin. During normal operation, input is not needed During serial programming to flash memory, MD1 = L must be input.	28	20
Power	VCC	Power supply pin	1	1
			18	14
			33	-
GND	VSS	GND pin	16	12
			32	24
			64	48
Clock	X0	Main clock (oscillation) input pin	30	22
	X0A	Sub clock (oscillation) input pin	19	15
	X1	Main clock (oscillation) I/O pin	31	23
	X1A	Sub clock (oscillation) I/O pin	20	16
	CROUT_1	Built-in High-speed CR-osc clock output port	57	42
ADC Power	AVCC	A/D converter analog power pin	41	31
	AVRH	A/D converter analog reference voltage input pin	42	32
ADC GND	AVSS	A/D converter GND pin	43	33
C pin	C	Power stabilization capacity pin	17	13

5. I/O Circuit Type

Type	Circuit	Remarks
A	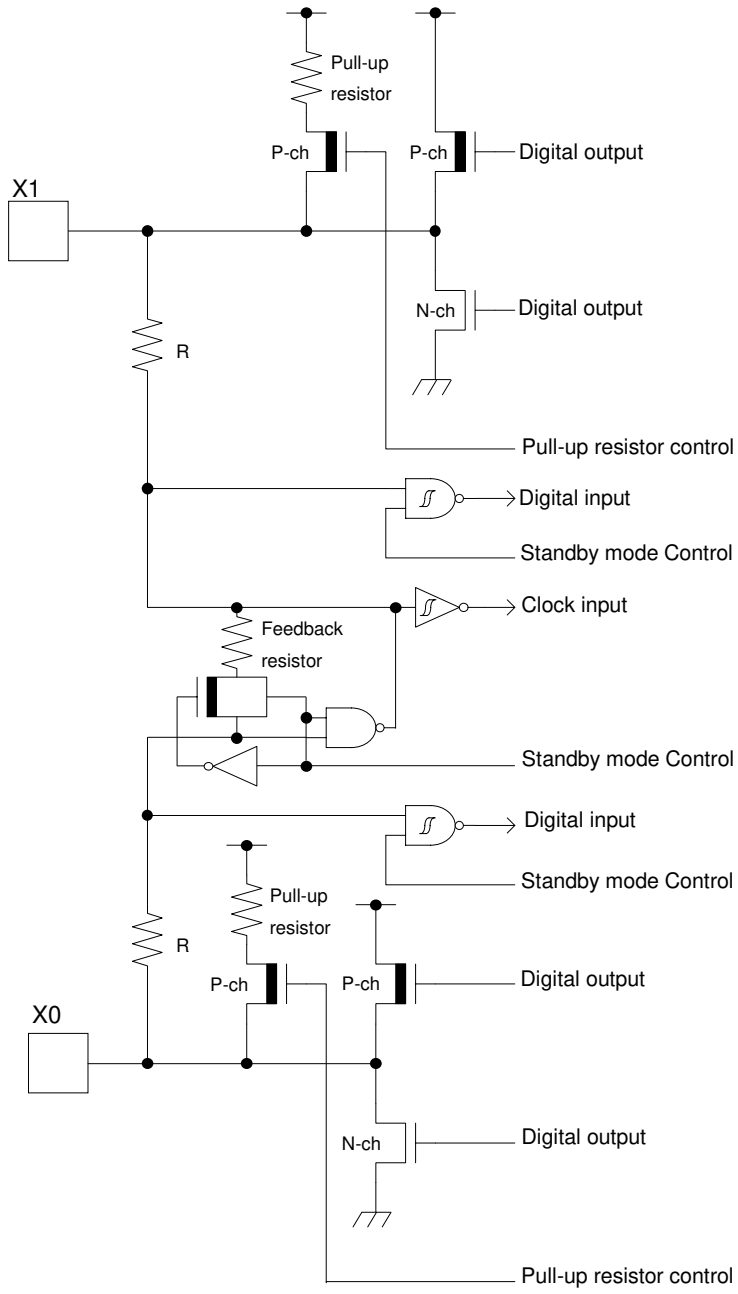	It is possible to select the main oscillation / GPIO function. When the main oscillation is selected. • Oscillation feedback resistor : Approximately 1 MΩ • With Standby control When the GPIO is selected. • CMOS level output. • CMOS level hysteresis input • With pull-up resistor control • With standby control • Pull-up resistor : Approximately 50 kΩ • I_{OH} = -4 mA, I_{OL} = 4 mA