Chipsmall Limited consists of a professional team with an average of over 10 year of expertise in the distribution of electronic components. Based in Hongkong, we have already established firm and mutual-benefit business relationships with customers from,Europe,America and south Asia,supplying obsolete and hard-to-find components to meet their specific needs.

With the principle of “Quality Parts,Customers Priority,Honest Operation,and Considerate Service”,our business mainly focus on the distribution of electronic components. Line cards we deal with include Microchip,ALPS,ROHM,Xilinx,Pulse,ON,Everlight and Freescale. Main products comprise IC,Modules,Potentiometer,IC Socket,Relay,Connector.Our parts cover such applications as commercial,industrial, and automotives areas.

We are looking forward to setting up business relationship with you and hope to provide you with the best service and solution. Let us make a better world for our industry!

Contact us

Tel: +86-755-8981 8866 Fax: +86-755-8427 6832
Email & Skype: info@chipsmall.com Web: www.chipsmall.com
Address: A1208, Overseas Decoration Building, #122 Zhenhua RD., Futian, Shenzhen, China

Freescale Semiconductor
Data Sheet

Document Number: MCF5475EC
Rev. 4, 12/2007

MCF547x ColdFire® Microprocessor

Supports MCF5470, MCF5471, MCF5472, MCF5473, MCF5474, and MCF5475

MCF547x

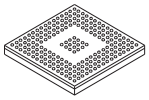

TEPBGA–388
27 mm x 27 mm

Features list:

- ColdFire V4e Core
  - Limited superscalar V4 ColdFire processor core
  - Up to 266 MHz peak internal core frequency (410 MIPS [Dhrystone 2.1] @ 266 MHz)
  - Harvard architecture
    - 32-Kbyte instruction cache
    - 32-Kbyte data cache
  - Memory Management Unit (MMU)
    - Separate, 32-entry, fully-associative instruction and data translation lookahead buffers
  - Floating point unit (FPU)
    - Double-precision conforms to IEE-754 standard
    - Eight floating point registers
- Internal master bus (XLB) arbiter
  - High performance split address and data transactions
  - Support for various parking modes
- 32-bit double data rate (DDR) synchronous DRAM (SDRAM) controller
  - 66–133 MHz operation
  - Supports DDR and SDR DRAM
  - Built-in initialization and refresh
  - Up to four chip selects enabling up to one GB of external memory
- Version 2.2 peripheral component interconnect (PCI) bus
  - 32-bit target and initiator operation
  - Support for up to five external PCI masters
  - 33–66 MHz operation with PCI bus to XLB divider ratios of 1:1, 1:2, and 1:4
- Flexible multi-function external bus (FlexBus)
  - Provides a glueless interface to boot flash/ROM, SRAM, and peripheral devices
  - Up to six chip selects
  - 33 – 66 MHz operation
- Communications I/O subsystem
  - Intelligent 16 channel DMA controller
  - Up to two 10/100 Mbps fast Ethernet controllers (FECs) each with separate 2-Kbyte receive and transmit FIFOs
  - Universal serial bus (USB) version 2.0 device controller
    - Support for one control and six programmable endpoints, interrupt, bulk, or isochronous
    - 4-Kbytes of shared endpoint FIFO RAM and 1 Kbyte of endpoint descriptor RAM
    - Integrated physical layer interface
  - Up to four programmable serial controllers (PSCs) each with separate 512-byte receive and transmit FIFOs for UART, USART, modem, codec, and IrDA 1.1 interfaces
  - I^2C peripheral interface
  - DMA Serial Peripheral Interface (DSPI)
- Optional Cryptography accelerator module
  - Execution units for:
    - DES/3DES block cipher
    - AES block cipher
    - RC4 stream cipher
    - MD5/SHA-1/SHA-256/HMAC hashing
    - Random Number Generator
- 32-Kbyte system SRAM
  - Arbitration mechanism shares bandwidth between internal bus masters
- System integration unit (SIU)
  - Interrupt controller
  - Watchdog timer
  - Two 32-bit slice timers alarm and interrupt generation
  - Up to four 32-bit general-purpose timers, compare, and PWM capability
  - GPIO ports multiplexed with peripheral pins
- Debug and test features
  - ColdFire background debug mode (BDM) port
  - JTAG/ IEEE 1149.1 test access port
- PLL and clock generator
  - 30 to 66.67 MHz input frequency range
- Operating Voltages
  - 1.5V internal logic
  - 2.5V DDR SDRAM bus I/O
  - 3.3V PCI, FlexBus, and all other I/O
- Estimated power consumption
  - Less than 1.5W (388 PBGA)

© Freescale Semiconductor, Inc., 2007. All rights reserved.

Table of Contents

1 Maximum Ratings 4
2 Thermal Characteristics 4
  2.1 Operating Temperatures 4
  2.2 Thermal Resistance 4
3 DC Electrical Specifications 5
4 Hardware Design Considerations 6
  4.1 PLL Power Filtering 6
  4.2 Supply Voltage Sequencing and Separation Cautions . . 6
  4.3 General USB Layout Guidelines 8
  4.4 USB Power Filtering 9
5 Output Driver Capability and Loading 10
6 PLL Timing Specifications 11
7 Reset Timing Specifications 12
8 FlexBus 12
  8.1 FlexBus AC Timing Characteristics 13
9 SDRAM Bus 15
  9.1 SDR SDRAM AC Timing Characteristics 15
  9.2 DDR SDRAM AC Timing Characteristics 18
10 PCI Bus 21
11 Fast Ethernet AC Timing Specifications 22
  11.1 MII/7-WIRE Interface Timing Specs 22
  11.2 MII Transmit Signal Timing 23
  11.3 MII Async Inputs Signal Timing (CRS, COL) 24
  11.4 MII Serial Management Channel Timing (MDIO,MDC) . 24
12 General Timing Specifications 25
13 I^2C Input/Output Timing Specifications 25
14 JTAG and Boundary Scan Timing 26
15 DSPI Electrical Specifications 29
16 Timer Module AC Timing Specifications 29
17 Case Drawing 30
18 Revision History 32

List of Figures

Figure 1. MCF547X Block Diagram 3
Figure 2. System PLL V_{DD} Power Filter 6
Figure 3. Supply Voltage Sequencing and Separation Cautions . 7
Figure 4. Preferred VBUS Connections 8
Figure 5. Alternate VBUS Connections 8
Figure 6. USB V_{DD} Power Filter 9
Figure 7. USBRBIAS Connection 10
Figure 8. Input Clock Timing Diagram 11
Figure 9. CLKIN, Internal Bus, and Core Clock Ratios 11
Figure 10. Reset Timing 12
Figure 11. FlexBus Read Timing 14
Figure 12. FlexBus Write Timing 15
Figure 13. SDR Write Timing 17
Figure 14. SDR Read Timing 17
Figure 15. DDR Clock Timing Diagram 18
Figure 16. DDR Write Timing 20
Figure 17. DDR Read Timing 21
Figure 18. PCI Timing 22
Figure 19. MII Receive Signal Timing Diagram 23
Figure 20. MII Transmit Signal Timing Diagram 23
Figure 21. MII Async Inputs Timing Diagram 24
Figure 22. MII Serial Management Channel TIming Diagram . . . 24
Figure 23. I^2C Input/Output Timings 26
Figure 24. Test Clock Input Timing 27
Figure 25. Boundary Scan (JTAG) Timing 27
Figure 26. Test Access Port Timing 27
Figure 27. TRST Timing Debug AC Timing Specifications 27
Figure 28. Real-Time Trace AC Timing 28
Figure 29. BDM Serial Port AC Timing 28
Figure 30. DSPI Timing 29
Figure 31. 388-pin BGA Case Outline 31

List of Tables

Table 1. Absolute Maximum Ratings 4
Table 2. Operating Temperatures 4
Table 3. Thermal Resistance 4
Table 4. DC Electrical Specifications 5
Table 5. USB Filter Circuit Values 9
Table 6. I/O Driver Capability 10
Table 7. Clock Timing Specifications 11
Table 8. MCF547x Divide Ratio Encodings 11
Table 9. Reset Timing Specifications 12
Table 10. FlexBus AC Timing Specifications 13
Table 11. SDR Timing Specifications 16
Table 12. DDR Clock Crossover Specifications 18
Table 13. DDR Timing Specifications 18
Table 14. PCI Timing Specifications 21
Table 15. MII Receive Signal Timing 23
Table 16. MII Transmit Signal Timing 23
Table 17. MII Transmit Signal Timing 24
Table 18. MII Serial Management Channel Signal Timing 24
Table 19. General AC Timing Specifications 25
Table 20. I^2C Input Timing Specifications between SCL and SDA 25
Table 21. I^2C Output Timing Specifications between SCL and SDA 25
Table 22. JTAG and Boundary Scan Timing 26
Table 23. Debug AC Timing Specifications 28
Table 24. DSPI Modules AC Timing Specifications 29
Table 25. Timer Module AC Timing Specifications 29

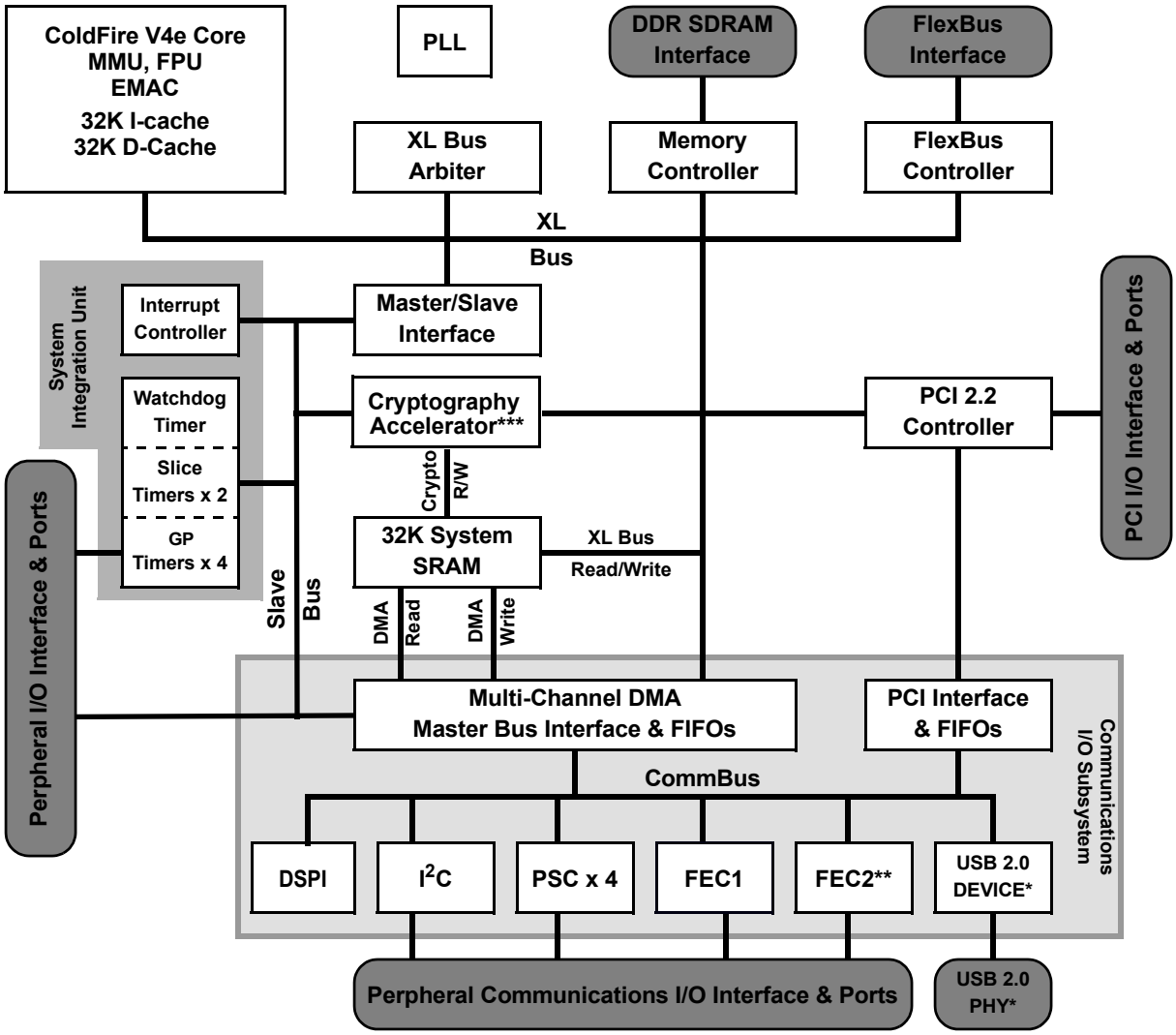

Figure 1. MCF547X Block Diagram

1 Maximum Ratings

Table 1 lists maximum and minimum ratings for supply and operating voltages and storage temperature. Operating outside of these ranges may cause erratic behavior or damage to the processor.

Table 1. Absolute Maximum Ratings

Rating	Symbol	Value	Units
External (I/O pads) supply voltage (3.3-V power pins)	EV_{DD}	–0.3 to +4.0	V
Internal logic supply voltage	IV_{DD}	–0.5 to +2.0	V
Memory (I/O pads) supply voltage (2.5-V power pins)	SD V_{DD}	–0.3 to +4.0 SDR Memory –0.3 to +2.8 DDR Memory	V
PLL supply voltage	PLL V_{DD}	–0.5 to +2.0	V
Internal logic supply voltage, input voltage level	V_{in}	–0.5 to +3.6	V
Storage temperature range	T_{stg}	–55 to +150	°C

2 Thermal Characteristics

2.1 Operating Temperatures

Table 2 lists junction and ambient operating temperatures.

Table 2. Operating Temperatures

Characteristic	Symbol	Value	Units
Maximum operating junction temperature	T_j	105	°C
Maximum operating ambient temperature	T_{Amax}	<70[1]	°C
Minimum operating ambient temperature	T_{Amin}	–0	°C

[1] This published maximum operating ambient temperature should be used only as a system design guideline. All device operating parameters are guaranteed only when the junction temperature lies within the specified range.

2.2 Thermal Resistance

Table 3 lists thermal resistance values.

Table 3. Thermal Resistance

Characteristic		Symbol	Value	Unit
324 pin TEPBGA — Junction to ambient, natural convection	Four layer board (2s2p)	θ_{JMA}	20–22[1,2]	°C/W
388 pin TEPBGA — Junction to ambient, natural convection	Four layer board (2s2p)	θ_{JMA}	19[1,2]	°C/W

Table 3. Thermal Resistance (continued)

Characteristic		Symbol	Value	Unit
Junction to ambient (@200 ft/min)	Four layer board (2s2p)	θ_{JMA}	16[1,2]	°C/W
Junction to board	—	θ_{JB}	11[3]	°C/W
Junction to case	—	θ_{JC}	7[4]	°C/W
Junction to top of package	Natural convection	Ψ_{jt}	2[1,5]	°C/W

1 θ_{JA} and Ψ_{jt} parameters are simulated in accordance with EIA/JESD Standard 51-2 for natural convection. Freescale recommends the use of θ_{JA} and power dissipation specifications in the system design to prevent device junction temperatures from exceeding the rated specification. System designers should be aware that device junction temperatures can be significantly influenced by board layout and surrounding devices. Conformance to the device junction temperature specification can be verified by physical measurement in the customer's system using the Ψ_{jt} parameter, the device power dissipation, and the method described in EIA/JESD Standard 51-2.

2 Per JEDEC JESD51-6 with the board horizontal.

3 Thermal resistance between the die and the printed circuit board per JEDEC JESD51-8. Board temperature is measured on the top surface of the board near the package.

4 Thermal resistance between the die and the case top surface as measured by the cold plate method (MIL SPEC-883 Method 1012.1).

5 Thermal characterization parameter indicating the temperature difference between package top and the junction temperature per JEDEC JESD51-2. When Greek letters are not available, the thermal characterization parameter is written as Psi-JT.

3 DC Electrical Specifications

Table 4 lists DC electrical operating temperatures. This table is based on an operating voltage of EV_{DD} = 3.3 V_{DC} ± 0.3 V_{DC} and IV_{DD} of 1.5 ± 0.07 V_{DC}.

Table 4. DC Electrical Specifications

Characteristic	Symbol	Min	Max	Units
External (I/O pads) operation voltage range	EV_{DD}	3.0	3.6	V
Memory (I/O pads) operation voltage range (DDR Memory)	SD V_{DD}	2.30	2.70	V
Internal logic operation voltage range[1]	IV_{DD}	1.43	1.58	V
PLL Analog operation voltage range[1]	PLL V_{DD}	1.43	1.58	V
USB oscillator operation voltage range	USB_OSV_{DD}	3.0	3.6	V
USB digital logic operation voltage range	$USBV_{DD}$	3.0	3.6	V
USB PHY operation voltage range	USB_PHYV_{DD}	3.0	3.6	V
USB oscillator analog operation voltage range	USB_OSCAV_{DD}	1.43	1.58	V
USB PLL operation voltage range	USB_PLLV_{DD}	1.43	1.58	V
Input high voltage SSTL 3.3V/2.5V[2]	V_{IH}	V_{REF} + 0.3	SD V_{DD} + 0.3	V
Input low voltage SSTL 3.3V/2.5V[2]	V_{IL}	V_{SS} - 0.3	V_{REF} - 0.3	V
Input high voltage 3.3V I/O pins	V_{IH}	0.7 x EV_{DD}	EV_{DD} + 0.3	V
Input low voltage 3.3V I/O pins	V_{IL}	V_{SS} - 0.3	0.35 x EV_{DD}	V

Table 4. DC Electrical Specifications (continued)

Characteristic	Symbol	Min	Max	Units
Output high voltage I_{OH} = 8 mA, 16 mA,24 mA	V_{OH}	2.4	—	V
Output low voltage I_{OL} = 8 mA, 16 mA,24 mA[5]	V_{OL}	—	0.5	V
Capacitance [3], V_{in} = 0 V, f = 1 MHz	C_{IN}	—	TBD	pF
Input leakage current	I_{in}	–1.0	1.0	μA

1 IV_{DD} and PLL V_{DD} should be at the same voltage. PLL V_{DD} should have a filtered input. Please see Figure 2 for an example circuit. There are three PLL V_{DD} inputs. A filter circuit should used on each PLL V_{DD} input.

2 This specification is guaranteed by design and is not 100% tested.

3 Capacitance C_{IN} is periodically sampled rather than 100% tested.

4 Hardware Design Considerations

4.1 PLL Power Filtering

To further enhance noise isolation, an external filter is strongly recommended for PLL analog V_{DD} pins. The filter shown in Figure 2 should be connected between the board V_{DD} and the PLL V_{DD} pins. The resistor and capacitors should be placed as close to the dedicated PLL V_{DD} pin as possible.

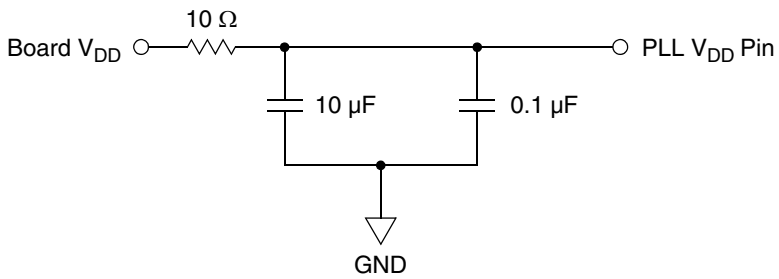

Figure 2. System PLL V_{DD} Power Filter

4.2 Supply Voltage Sequencing and Separation Cautions

Figure 3 shows situations in sequencing the I/O V_{DD} (EV_{DD}), SDRAM V_{DD} (SD V_{DD}), PLL V_{DD} (PLL V_{DD}), and Core V_{DD} (IV_{DD}).

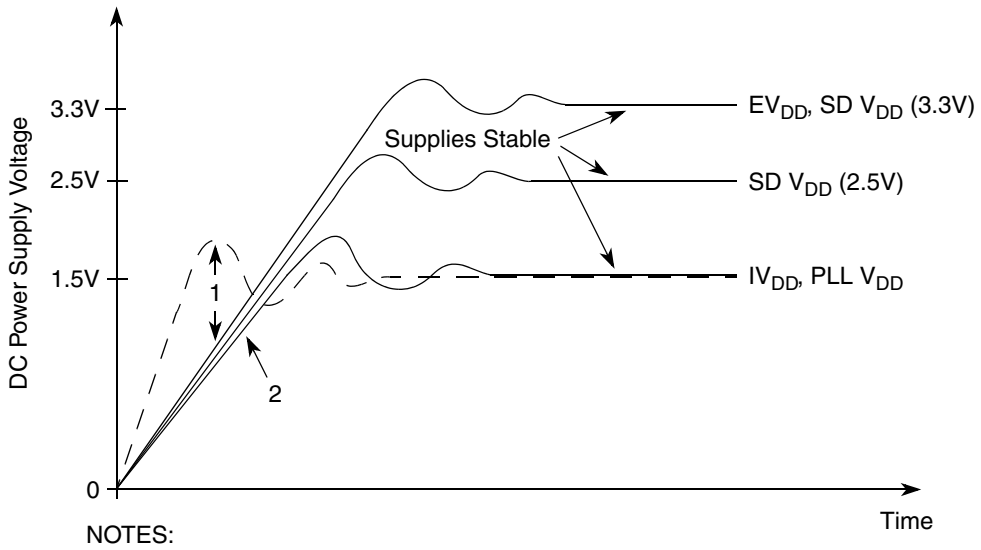

NOTES:
1. IVDD should not exceed EVDD or SD VDD by more than 0.4V at any time, including power-up.
2. Recommended that IVDD/PLL VDD should track EVDD/SD VDD up to 0.9V, then separate for completion of ramps.
3. Input voltage must not be greater than the supply voltage (EVDD, SD VDD, IVDD, or PLL VDD) by more than 0.5V at any time, including during power-up.
4. Use 1 microsecond or slower rise time for all supplies.

Figure 3. Supply Voltage Sequencing and Separation Cautions

The relationship between SD V_{DD} and EV_{DD} is non-critical during power-up and power-down sequences. SD V_{DD} (2.5V or 3.3V) and EV_{DD} are specified relative to IV_{DD}.

4.2.1 Power Up Sequence

If EV_{DD}/SD V_{DD} are powered up with the IV_{DD} at 0V, the sense circuits in the I/O pads cause all pad output drivers connected to the EV_{DD}/SD V_{DD} to be in a high impedance state. There is no limit to how long after EV_{DD}/SD V_{DD} powers up before IV_{DD} must power up. IV_{DD} should not lead the EV_{DD}, SD V_{DD}, or PLL V_{DD} by more than 0.4V during power ramp up or there is high current in the internal ESD protection diodes. The rise times on the power supplies should be slower than 1 microsecond to avoid turning on the internal ESD protection clamp diodes.

The recommended power up sequence is as follows:

1. Use 1 microsecond or slower rise time for all supplies.
2. IV_{DD}/PLL V_{DD} and EV_{DD}/SD V_{DD} should track up to 0.9V, then separate for the completion of ramps with EV_{DD}/SD V_{DD} going to the higher external voltages. One way to accomplish this is to use a low drop-out voltage regulator.

4.2.2 Power Down Sequence

If IV_{DD}PLL V_{DD} are powered down first, sense circuits in the I/O pads cause all output drivers to be in a high impedance state. There is no limit on how long after IV_{DD} and PLL V_{DD} power down before EV_{DD} or SD V_{DD} must power down. IV_{DD} should not lag EV_{DD}, SD V_{DD}, or PLL V_{DD} going low by more than 0.4V during power down or there is undesired high current in the ESD protection diodes. There are no requirements for the fall times of the power supplies.

The recommended power down sequence is as follows:

1. Drop IV_{DD}/PLL V_{DD} to 0V
2. Drop EV_{DD}/SD V_{DD} supplies

4.3 General USB Layout Guidelines

4.3.1 USB D+ and D- High-Speed Traces

1. High speed clock and the USBD+ and USBD- differential pair should be routed first.
2. Route USBD+ and USBD- signals on the top layer of the board.
3. The trace width and spacing of the USBD+ and USBD- signals should be such that the differential impedance is 90Ω.
4. Route traces over continuous planes (power and ground)—they should not pass over any power/ground plane slots or anti-etch. When placing connectors, make sure the ground plane clear-outs around each pin have ground continuity between all pins.
5. Maintain the parallelism (skew matched) between USBD+ and USBD-. These traces should be the same overall length.
6. Do not route USBD+ and USBD- traces under oscillators or parallel to clock traces and/or data buses. Minimize the lengths of high speed signals that run parallel to the USBD+ and USBD- pair. Maintain a minimum 50mil spacing to clock signals.
7. Keep USBD+ and USBD- traces as short as possible.
8. Route USBD+, USBD-, and USBVBUS signals with a minimum amount of vias and corners. Use 45° turns.
9. Stubs should be avoided as much as possible. If they cannot be avoided, stubs should be no greater than 200mils.

4.3.2 USB VBUS Traces

Connecting the USBVBUS pin directly to the 5V VBUS signal from the USB connector can cause long-term reliability problems in the ESD network of the processor. Therefore, use of an external voltage divider for VBUS is recommended. Figure 4 and Figure 5 depict possible connections for VBUS. Point A, marked in each figure, is where a 5V version of VBUS should connect. Point B, marked in each figure, is where a 3.3V version of VBUS should connect to the USBVBUS pin on the device.

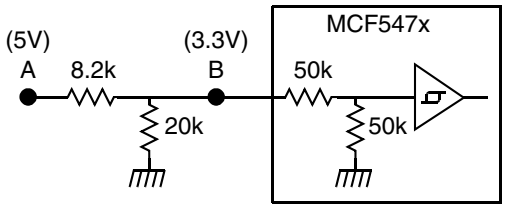

Figure 4. Preferred VBUS Connections

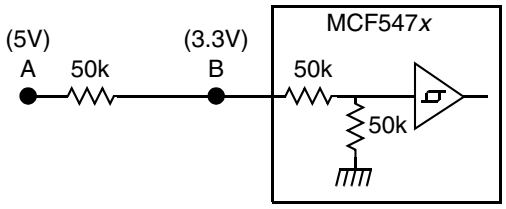

Figure 5. Alternate VBUS Connections

4.3.3 USB Receptacle Connections

It is recommended to connect the shield and the ground pin of the B USB receptacle for upstream ports to the board ground plane. The ground pin of the A USB receptacles for downstream ports should also be connected to the board ground plane, but industry practice varies widely on the connection of the shield of the A USB receptacles to other system grounds. Take precautions for control of ground loops between hosts and self-powered USB devices through the cable shield.

4.4 USB Power Filtering

To minimize noise, an external filter is required for each of the USB power pins. The filter shown in Figure 6 should be connected between the board EV_{DD} or IV_{DD} and each of the USB V_{DD} pins.

- The resistor and capacitors should be placed as close to the dedicated USB V_{DD} pin as possible.
- A separate filter circuit should be included for each USB V_{DD} pin, a total of five circuits.
- All traces should be as low impedance as possible, especially ground pins to the ground plane.
- The filter for USB_PHYVDD to VSS should be connected to the power and ground planes, respectively, not fingers of the planes.
- In addition to keeping the filter components for the USB_PLLVDD as close as practical to the body of the processor as previously mentioned, special care should be taken to avoid coupling switching power supply noise or digital switching noise onto the portion of that supply between the filter and the processor.
- The capacitors for C2 in the table below should be rated X5R or better due to temperature performance.

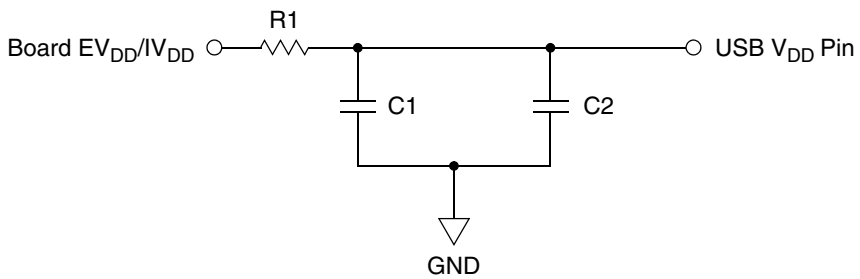

Figure 6. USB V_{DD} Power Filter

NOTE

In addition to the above filter circuitry, a 0.01 F capacitor is also recommended in parallel with those shown.

Table 5 lists the resistor values and supply voltages to be used in the circuit for each of the USB V_{DD} pins.

Table 5. USB Filter Circuit Values

USB V_{DD} Pin	Nominal Voltage	R1 (Ω)	C1 (μF)	C2 (μF)
USBVDD (Bias generator supply)	3.3V	10	10	0.1
USB_PHYVDD (Main transceiver supply)	3.3V	0	10	0.1
USB_PLLVDD (PLL supply)	1.5V	10	1	0.1
USB_OSCVDD (Oscillator supply)	3.3V	0	10	0.1
USB_OSCAVDD (Oscillator analog supply)	1.5V	0	10	0.1

4.4.1 Bias Resistor

The USBRBIAS resistor should be placed as close to the dedicated USB 2.0 pins as possible. The tolerance should be ±1%.

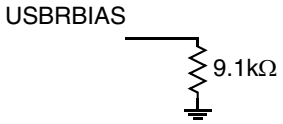

Figure 7. USBRBIAS Connection

5 Output Driver Capability and Loading

Table 6 lists values for drive capability and output loading.

Table 6. I/O Driver Capability[1]

Signal	Drive Capability	Output Load (C_L)
SDRAMC (SDADDR[12:0], SDDATA[31:0], $\overline{\text{RAS}}$, $\overline{\text{CAS}}$, SDDM[3:0], $\overline{\text{SDWE}}$, SDBA[1:0]	24 mA	15 pF
SDRAMC DQS and clocks (SDDQS[3:0], SDRDQS, SDCLK[1:0], $\overline{\text{SDCLK}}$[1:0], SDCKE)	24 mA	15 pF
SDRAMC chip selects ($\overline{\text{SDCS}}$[3:0])	24 mA	15 pF
FlexBus (AD[31:0], $\overline{\text{FBCS}}$[5:0], ALE, R/$\overline{\text{W}}$, $\overline{\text{BE}}$/$\overline{\text{BWE}}$[3:0], $\overline{\text{OE}}$)	16 mA	30 pF
FEC (E*n*MDIO, E*n*MDC, E*n*TXEN, E*n*TXD[3:0], E*n*TXER	8 mA	15 pF
Timer (TOUT[3:0])	8 mA	50 pF
$\overline{\text{DACK}}$[1:0]	8 mA	30 pF
PSC (PSC*n*TXD[3:0], $\overline{\text{PSC}n\text{RTS}}$/PSC*n*FSYNC,	8 mA	30 pF
DSPI (DSPISOUT, DSPICS0/SS, DSPICS[2:3], DSPICS5/PCSS)	24 mA	50 pF
PCI (PCIAD[31:0], PCIBG[4:1], PCIBG0/PCIREQOUT, PCIDEVSEL, PCICXBE[3:0], PCIFRM, PCIPERR, PCIRESET, PCISERR, PCISTOP, PCIPAR, PCITRDY, PCIIRDY	16 mA	50 pF
I2C (SCL, SDA)	8 mA	50 pF
BDM (PSTCLK, PSTDDATA[7:0], DSO/TDO,	8 mA	25 pF
RSTO	8 mA	50 pF

[1] The device's pads have balanced sink and source current. The drive capability is the same as the sink capability.

6 PLL Timing Specifications

The specifications in Table 7 are for the CLKIN pin.

Table 7. Clock Timing Specifications

Num	Characteristic	Min	Max	Units
C1	Cycle time	15.0	40	ns
C2	Rise time (20% of Vdd to 80% of vdd)	—	2	ns
C3	Fall time (80% of Vdd to 20% of Vdd)	—	2	ns
C4	Duty cycle (at 50% of Vdd)	40	60	%

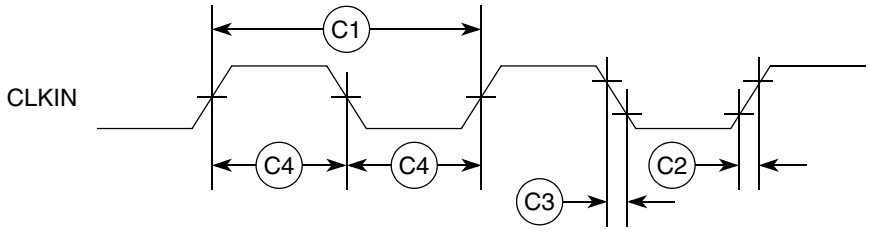

Figure 8. Input Clock Timing Diagram

Table 8 shows the supported PLL encodings.

Table 8. MCF547x Divide Ratio Encodings

AD[12:8][1]	Clock Ratio	CLKIN—PCI and FlexBus Frequency Range (MHz)	Internal XLB, SDRAM Bus, and PSTCLK Frequency Range (MHz)	Core Frequency Range (MHz)
00011	1:2	41.67–66.66	83.33–133.33	166.66–266.66
00101	1:2	25.0–44.42	50.0–88.83[2]	100.0–177.66
01111	1:4	25.0–33.3	100–133.33	200–266.66

[1] All other values of AD[12:8] are reserved.

[2] DDR memories typically have a minimum speed of 83 MHz. Some vendors specifiy down to 75 MHz. Check with the memory component specifications to verify.

Figure 9 correlates CLKIN, internal bus, and core clock frequencies for the 1x–4x multipliers.

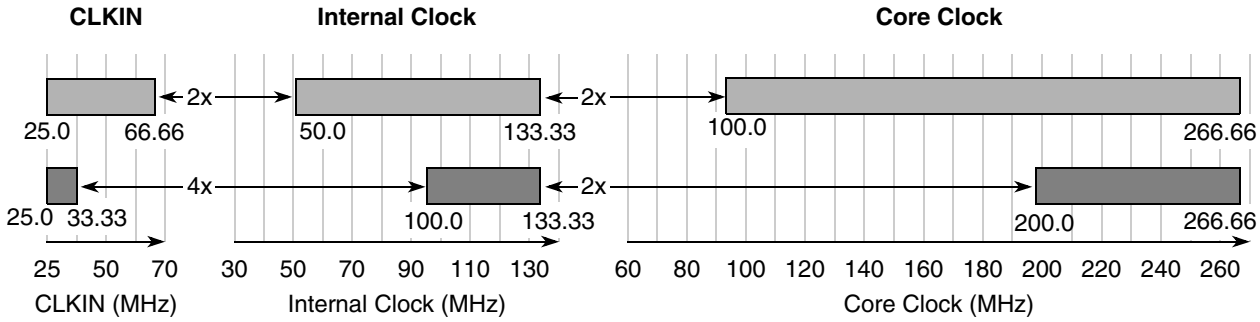

Figure 9. CLKIN, Internal Bus, and Core Clock Ratios

7 Reset Timing Specifications

Table 9 lists specifications for the reset timing parameters shown in Figure 10

Table 9. Reset Timing Specifications

Num	Characteristic	66 MHz CLKIN		Units
		Min	Max	
R1[1]	Valid to CLKIN (setup)	8	—	ns
R2	CLKIN to invalid (hold)	1.0	—	ns
R3	$\overline{\text{RSTI}}$ to invalid (hold)	1.0	—	ns
	$\overline{\text{RSTI}}$ pulse duration	5	—	CLKIN cycles

[1] $\overline{\text{RSTI}}$ and FlexBus data lines are synchronized internally. Setup and hold times must be met only if recognition on a particular clock is required.

Figure 10 shows reset timing for the values in Table 9.

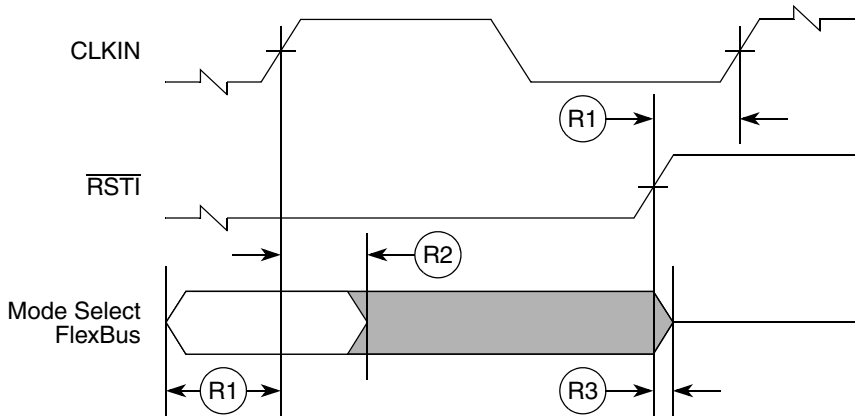

NOTE:
Mode selects are registered on the rising clock edge before the cycle in which $\overline{\text{RSTI}}$ is recognized as being negated.

Figure 10. Reset Timing

8 FlexBus

A multi-function external bus interface called FlexBus is provided on the MCF5472 with basic functionality to interface to slave-only devices up to a maximum bus frequency of 66 MHz. It can be directly connected to asynchronous or synchronous devices such as external boot ROMs, flash memories, gate-array logic, or other simple target (slave) devices with little or no additional circuitry. For asynchronous devices, a simple chip-select based interface can be used. The FlexBus interface has six general purpose chip-selects ($\overline{\text{FBCS}}$[5:0]). Chip-select $\overline{\text{FBCS0}}$ can be dedicated to boot ROM access and can be programmed to be byte (8 bits), word (16 bits), or longword (32 bits) wide. Control signal timing is compatible with common ROM / flash memories.

8.1 FlexBus AC Timing Characteristics

The following timing numbers indicate when data is latched or driven onto the external bus, relative to the system clock.

Table 10. FlexBus AC Timing Specifications

Num	Characteristic	Min	Max	Unit	Notes
	Frequency of Operation	25	66	Mhz	1
FB1	Clock Period (CLKIN)	15.15	40	ns	2
FB2	Address, Data, and Control Output Valid (AD[31:0], $\overline{\text{FBCS}}$[5:0], R/$\overline{\text{W}}$, ALE, TSIZ[1:0], $\overline{\text{BE}}$/$\overline{\text{BWE}}$[3:0], $\overline{\text{OE}}$, and $\overline{\text{TBST}}$)	—	7.0	ns	3
FB3	Address, Data, and Control Output Hold ((AD[31:0], $\overline{\text{FBCS}}$[5:0], R/$\overline{\text{W}}$, ALE, TSIZ[1:0], $\overline{\text{BE}}$/$\overline{\text{BWE}}$[3:0], $\overline{\text{OE}}$, and $\overline{\text{TBST}}$)	1	—	ns	3, 4
FB4	Data Input Setup	3.5	—	ns	
FB5	Data Input Hold	0	—	ns	
FB6	Transfer Acknowledge ($\overline{\text{TA}}$) Input Setup	4	—	ns	
FB7	Transfer Acknowledge ($\overline{\text{TA}}$) Input Hold	0	—	ns	
FB8	Address Output Valid (PCIAD[31:0])	—	7.0	ns	5
FB9	Address Output Hold (PCIAD[31:0])	0	—	ns	5

1 The frequency of operation is the same as the PCI frequency of operation. The MCF547X supports a single external reference clock (CLKIN). This signal defines the frequency of operation for FlexBus and PCI.

2 Max cycle rate is determined by CLKIN and how the user has the system PLL configured.

3 Timing for chip selects only applies to the FBCS[5:0] signals. Please see Section 9.2, “DDR SDRAM AC Timing Characteristics” for SDCS[3:0] timing.

4 The FlexBus supports programming an extension of the address hold. Please consult the MCF547X specification manual for more information.

5 These specs are used when the PCIAD[31:0] signals are configured as 32-bit, non-muxed FlexBus address signals.

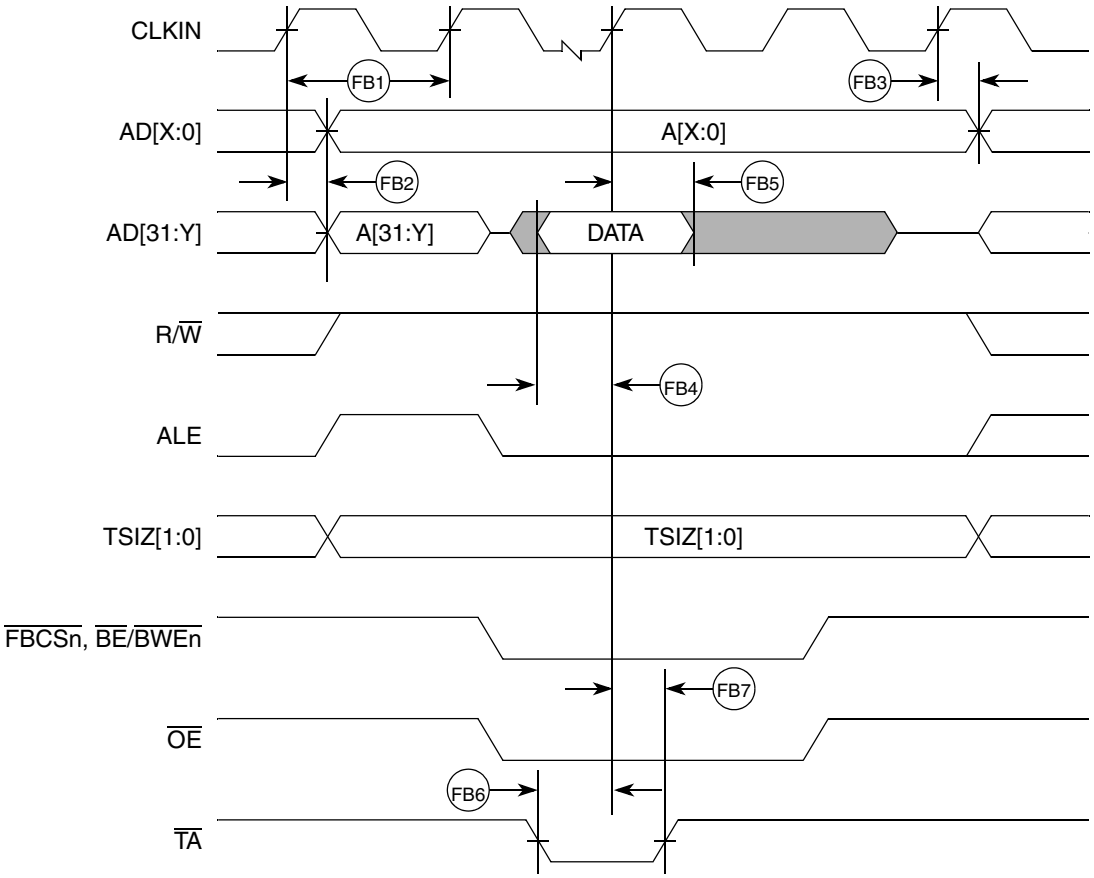

Figure 11. FlexBus Read Timing

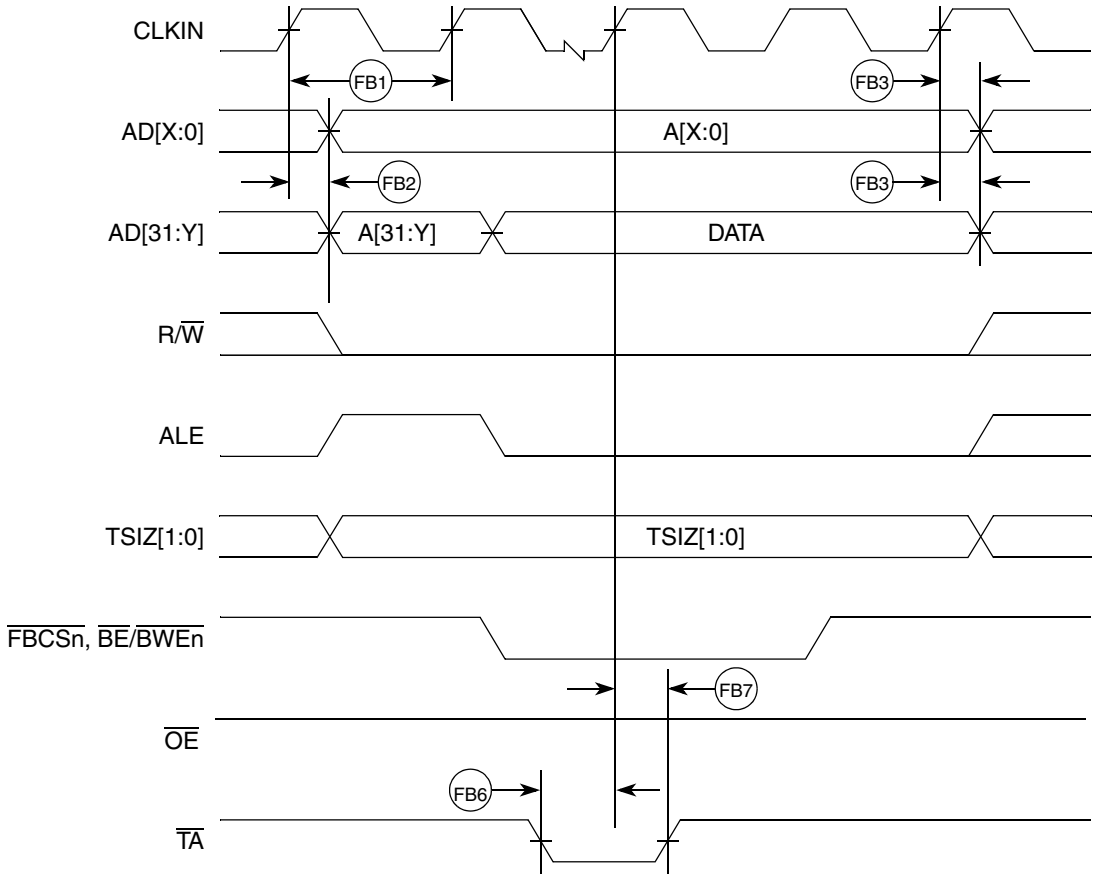

Figure 12. FlexBus Write Timing

9 SDRAM Bus

The SDRAM controller supports accesses to main SDRAM memory from any internal master. It supports standard SDRAM or double data rate (DDR) SDRAM, but it does not support both at the same time. The SDRAM controller uses SSTL2 and SSTL3 I/O drivers. Both SSTL drive modes are programmable for Class I or Class II drive strength.

9.1 SDR SDRAM AC Timing Characteristics

The following timing numbers indicate when data is latched or driven onto the external bus, relative to the memory bus clock, when operating in SDR mode on write cycles and relative to SDR_DQS on read cycles. The MCF547*x* SDRAM controller is a DDR controller that has an SDR mode. Because it is designed to support DDR, a DQS pulse must be supplied to the MCF547*x* for each data beat of an SDR read. The MCF547*x* accomplishes this by asserting a signal called SDR_DQS during read cycles. Care must be taken during board design to adhere to the following guidelines and specs with regard to the SDR_DQS signal and its usage.

Table 11. SDR Timing Specifications

Symbol	Characteristic	Min	Max	Unit	Notes
	Frequency of Operation	0	133	Mhz	1
SD1	Clock Period (t_{CK})	7.52	12	ns	2
SD2	Clock Skew (t_{SK})		TBD		
SD3	Pulse Width High (t_{CKH})	0.45	0.55	SDCLK	3
SD4	Pulse Width Low (t_{CKL})	0.45	0.55	SDCLK	4
SD5	Address, CKE, CAS, RAS, WE, BA, CS - Output Valid (t_{CMV})		0.5 × SDCLK + 1.0ns	ns	
SD6	Address, CKE, CAS, RAS, WE, BA, CS - Output Hold (t_{CMH})	2.0		ns	
SD7	SDRDQS Output Valid (t_{DQSOV})		Self timed	ns	5
SD8	SDDQS[3:0] input setup relative to SDCLK (t_{DQSIS})	0.25 × SDCLK	0.40 × SDCLK	ns	6
SD9	SDDQS[3:0] input hold relative to SDCLK (t_{DQSIH})	Does not apply. 0.5 SDCLK fixed width.			7
SD10	Data Input Setup relative to SDCLK (reference only) (t_{DIS})	0.25 × SDCLK		ns	8
SD11	Data Input Hold relative to SDCLK (reference only) (t_{DIH})	1.0		ns	
SD12	Data and Data Mask Output Valid (t_{DV})		0.75 × SDCLK +0.500ns	ns	
SD13	Data and Data Mask Output Hold (t_{DH})	1.5		ns	

1 The frequency of operation is 2x or 4x the CLKIN frequency of operation. The MCF547X supports a single external reference clock (CLKIN). This signal defines the frequency of operation for FlexBus and PCI, but SDRAM clock operates at the same frequency as the internal bus clock. Please see the PLL chapter of the *MCF547X Reference Manual* for more information on setting the SDRAM clock rate.

2 SDCLK is one SDRAM clock in (ns).

3 Pulse width high plus pulse width low cannot exceed min and max clock period.

4 Pulse width high plus pulse width low cannot exceed min and max clock period.

5 SDR_DQS is designed to pulse 0.25 clock before the rising edge of the memory clock. This is a guideline only. Subtle variation from this guideline is expected. SDR_DQS only pulses during a read cycle and one pulse occurs for each data beat.

6 SDR_DQS is designed to pulse 0.25 clock before the rising edge of the memory clock. This spec is a guideline only. Subtle variation from this guideline is expected. SDR_DQS only pulses during a read cycle and one pulse occurs for each data beat.

7 The SDR_DQS pulse is designed to be 0.5 clock in width. The timing of the rising edge is most important. The falling edge does not affect the memory controller.

8 Because a read cycle in SDR mode uses the DQS circuit within the MCF547X, it is most critical that the data valid window be centered 1/4 clk after the rising edge of DQS. Ensuring that this happens results in successful SDR reads. The input setup spec is provided as guidance.

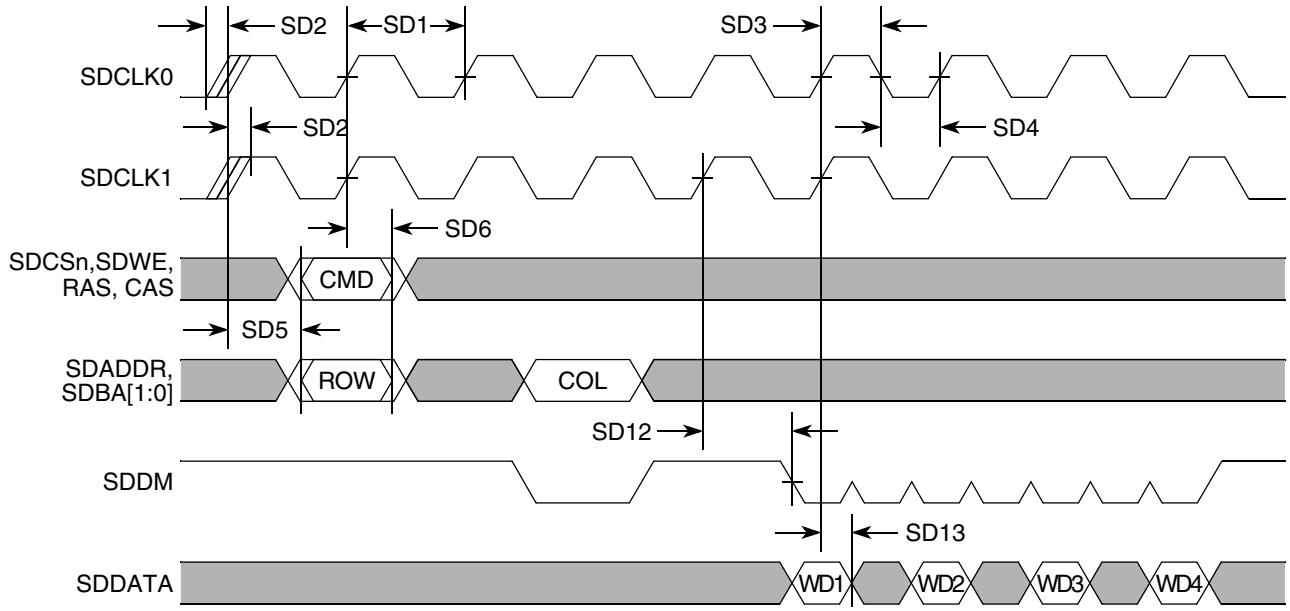

Figure 13. SDR Write Timing

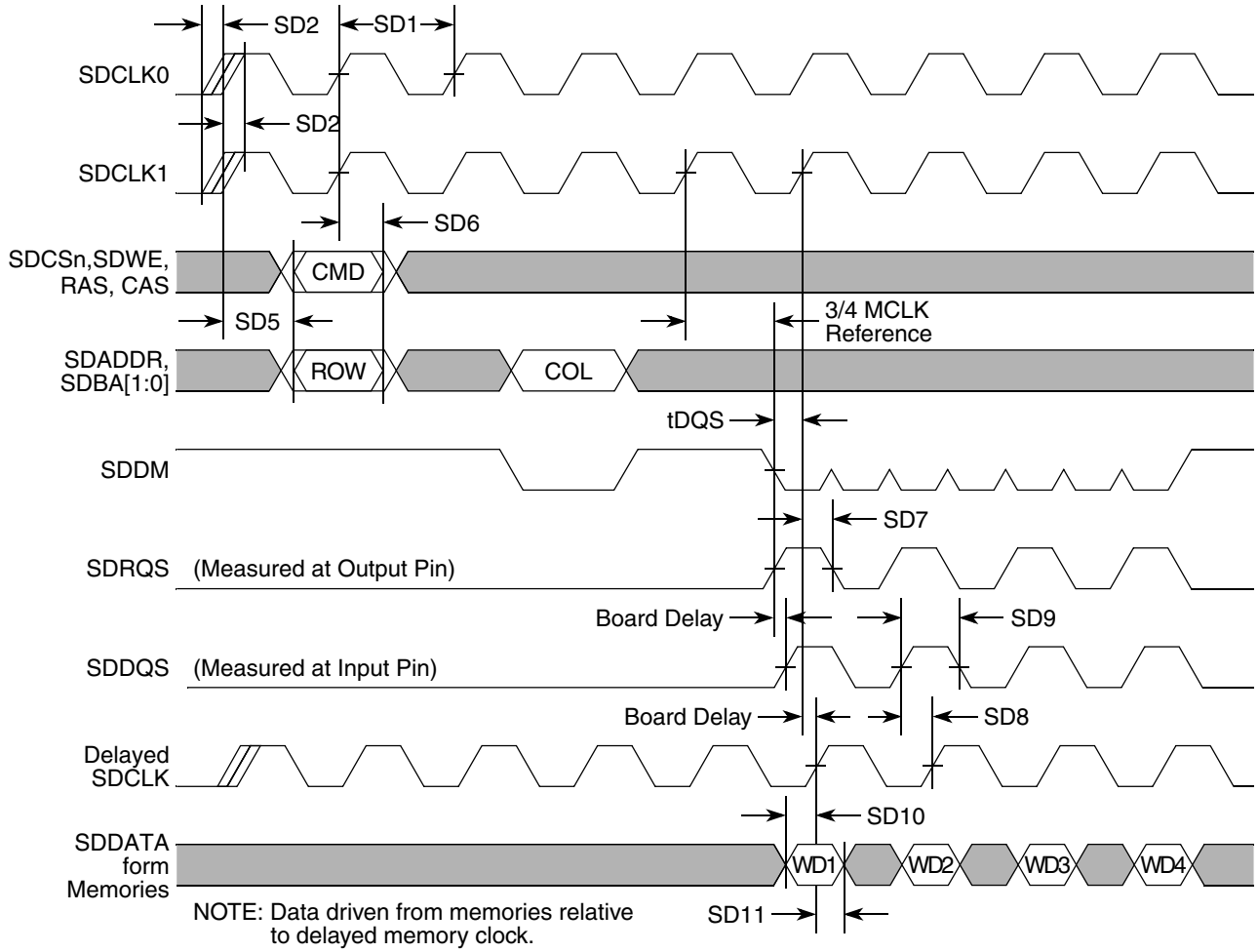

Figure 14. SDR Read Timing

9.2 DDR SDRAM AC Timing Characteristics

When using the DDR SDRAM controller, the following timing numbers must be followed to properly latch or drive data onto the memory bus. All timing numbers are relative to the four DQS byte lanes.

Table 12shows the DDR clock crossover specifications.

Table 12. DDR Clock Crossover Specifications

Symbol	Characteristic	Min	Max	Unit
V_{MP}	Clock output mid-point voltage	1.05	1.45	V
V_{OUT}	Clock output voltage level	–0.3	SD_VDD + 0.3	V
V_{ID}	Clock output differential voltage (peak to peak swing)	0.7	SD_VDD + 0.6	V
V_{IX}	Clock crossing point voltage[1]	1.05	1.45	V

[1] The clock crossover voltage is only guaranteed when using the highest drive strength option for the SDCLK[1:0] and $\overline{\text{SDCLK}}$[1:0] signals.

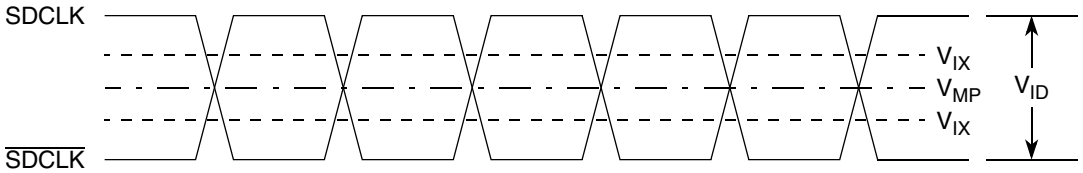

Figure 15. DDR Clock Timing Diagram

Table 13. DDR Timing Specifications

Symbol	Characteristic	Min	Max	Unit	Notes
	Frequency of Operation	50[1]	133	MHz	2
DD1	Clock Period (t_{CK})	7.52	12	ns	3
DD2	Pulse Width High (t_{CKH})	0.45	0.55	SDCLK	4
DD3	Pulse Width Low (t_{CKL})	0.45	0.55	SDCLK	5
DD4	Address, SDCKE, $\overline{\text{CAS}}$, $\overline{\text{RAS}}$, $\overline{\text{WE}}$, SDBA, $\overline{\text{SDCS}}$—Output Valid (t_{CMV})	—	0.5 × SDCLK + 1.0 ns	ns	6
DD5	Address, SDCKE, $\overline{\text{CAS}}$, $\overline{\text{RAS}}$, $\overline{\text{WE}}$, SDBA, $\overline{\text{SDCS}}$—Output Hold (t_{CMH})	2.0	—	ns	
DD6	Write Command to first DQS Latching Transition (t_{DQSS})	—	1.25	SDCLK	
DD7	Data and Data Mask Output Setup (DQ–>DQS) Relative to DQS (DDR Write Mode) (t_{QS})	1.0	—	ns	7 8
DD8	Data and Data Mask Output Hold (DQS–>DQ) Relative to DQS (DDR Write Mode) (t_{QH})	1.0	—	ns	9
DD9	Input Data Skew Relative to DQS (Input Setup) (t_{IS})		1	ns	10
DD10	Input Data Hold Relative to DQS (t_{IH})	0.25 × SDCLK + 0.5ns	—	ns	11
DD11	DQS falling edge to SDCLK rising (output setup time) (t_{DSS})	0.5	—	ns	
DD12	DQS falling edge from SDCLK rising (output hold time) (t_{DSH})	0.5	—	ns	

Table 13. DDR Timing Specifications (continued)

Symbol	Characteristic	Min	Max	Unit	Notes
DD13	DQS input read preamble width (t_{RPRE})	0.9	1.1	SDCLK	
DD14	DQS input read postamble width (t_{RPST})	0.4	0.6	SDCLK	
DD15	DQS output write preamble width (t_{WPRE})	0.25	—	SDCLK	
DD16	DQS output write postamble width (t_{WPST})	0.4	0.6	SDCLK	

[1] DDR memories typically have a minimum speed specification of 83 MHz. Check memory component specifications to verify.

[2] The frequency of operation is 2x or 4x the CLKIN frequency of operation. The MCF547X supports a single external reference clock (CLKIN). This signal defines the frequency of operation for FlexBus and PCI, but SDRAM clock operates at the same frequency as the internal bus clock. Please see the reset configuration signals description in the “Signal Descriptions” chapter within the *MCF547x Reference Manual*.

[3] SDCLK is one memory clock in (ns).

[4] Pulse width high plus pulse width low cannot exceed max clock period.

[5] Pulse width high plus pulse width low cannot exceed max clock period.

[6] Command output valid should be 1/2 the memory bus clock (SDCLK) plus some minor adjustments for process, temperature, and voltage variations.

[7] This specification relates to the required input setup time of today’s DDR memories. SDDATA[31:24] is relative to SDDQS3, SDDATA[23:16] is relative to SDDQS2, SDDATA[15:8] is relative to SDDQS1, and SDDATA[7:0] is relative SDDQS0.

[8] The first data beat is valid before the first rising edge of SDDQS and after the SDDQS write preamble. The remaining data beats is valid for each subsequent SDDQS edge.

[9] This specification relates to the required hold time of today’s DDR memories. SDDATA[31:24] is relative to SDDQS3, SDDATA[23:16] is relative to SDDQS2, SDDATA[15:8] is relative to SDDQS1, and SDDATA[7:0] is relative SDDQS0.

[10] Data input skew is derived from each SDDQS clock edge. It begins with a SDDQS transition and ends when the last data line becomes valid. This input skew must include DDR memory output skew and system level board skew (due to routing or other factors).

[11] Data input hold is derived from each SDDQS clock edge. It begins with a SDDQS transition and ends when the first data line becomes invalid.

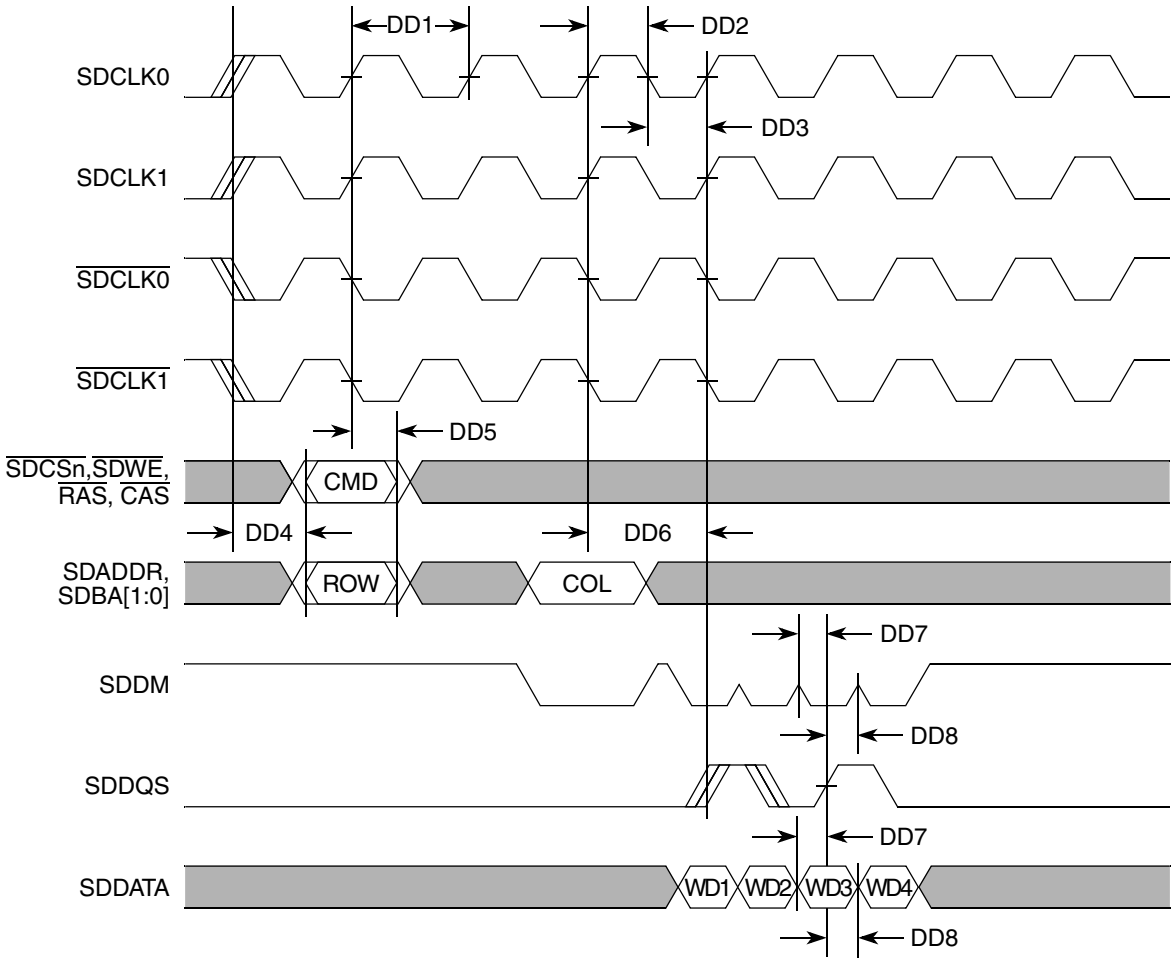

Figure 16. DDR Write Timing

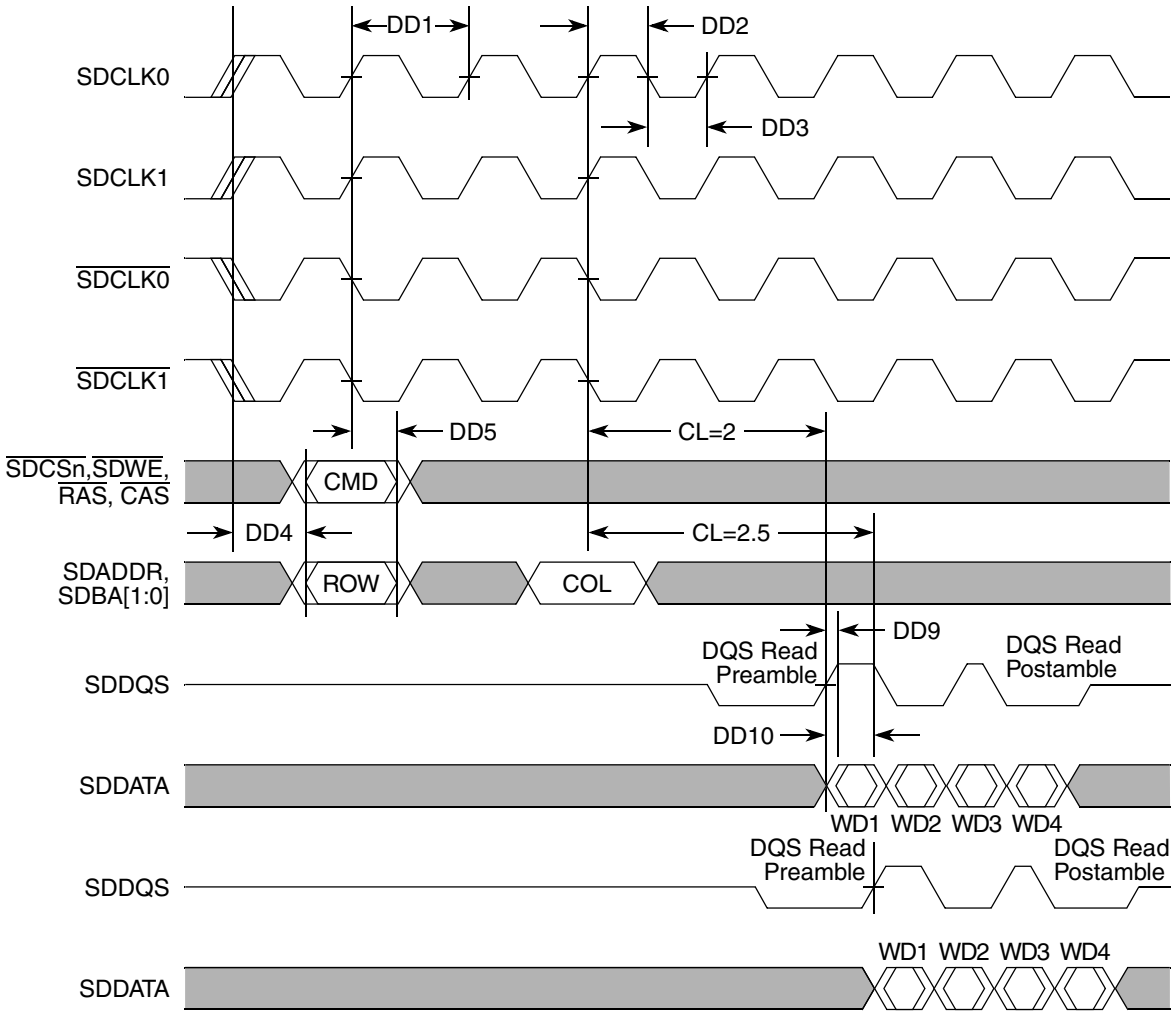

Figure 17. DDR Read Timing

10 PCI Bus

The PCI bus on the MCF547*x* is PCI 2.2 compliant. The following timing numbers are mostly from the PCI 2.2 spec. Please refer to the PCI 2.2 spec for a more detailed timing analysis.

Table 14. PCI Timing Specifications

Num	Characteristic	Min	Max	Unit	Notes
	Frequency of Operation	25	66	MHz	1
P1	Clock Period (t_{CK})	15.15	40	ns	2
P2	Address, Data, and Command (33< PCI ≤ 66 Mhz)—Input Setup (t_{IS})	3.0	—	ns	
P3	Address, Data, and Command (0 < PCI ≤ 33 Mhz)—Input Setup (t_{IS})	7.0	—	ns	
P4	Address, Data, and Command (33–66 Mhz)—Output Valid (t_{DV})	—	6.0	ns	3
P5	Address, Data, and Command (0–33 Mhz) - Output Valid (t_{DV})	—	11.0	ns	
P6	PCI signals (0–66 Mhz) - Output Hold (t_{DH})	0	—	ns	4

Table 14. PCI Timing Specifications (continued)

Num	Characteristic	Min	Max	Unit	Notes
P7	PCI signals (0–66 Mhz) - Input Hold (t_{IH})	0	—	ns	5
P8	PCI REQ/GNT (33 < PCI ≤ 66Mhz) - Output valid (t_{DV})	—	6	ns	6
P9	PCI REQ/GNT (0 < PCI ≤ 33Mhz) - Output valid (t_{DV})	—	12	ns	
P10	PCI REQ/GNT (33 < PCI ≤ 66Mhz) - Input Setup (t_{IS})	—	5	ns	
P11	PCI REQ (0 < PCI ≤ 33Mhz) - Input Setup (t_{IS})	12	—	ns	
P12	PCI GNT (0 < PCI ≤ 33Mhz) - Input Setup (t_{IS})	10	—	ns	

1 Please see the reset configuration signals description in the “Signal Descriptions” chapter within the *MCF547x Reference Manual*. Also specific guidelines may need to be followed when operating the system PLL below certain frequencies.

2 Max cycle rate is determined by CLKIN and how the user has the system PLL configured.

3 All signals defined as PCI bused signals. Does not include PTP (point-to-point) signals.

4 PCI 2.2 spec does not require an output hold time. Although the MCF547X may provide a slight amount of hold, it is not required or guaranteed.

5 PCI 2.2 spec requires zero input hold.

6 These signals are defined at PTP (Point-to-point) in the PCI 2.2 spec.

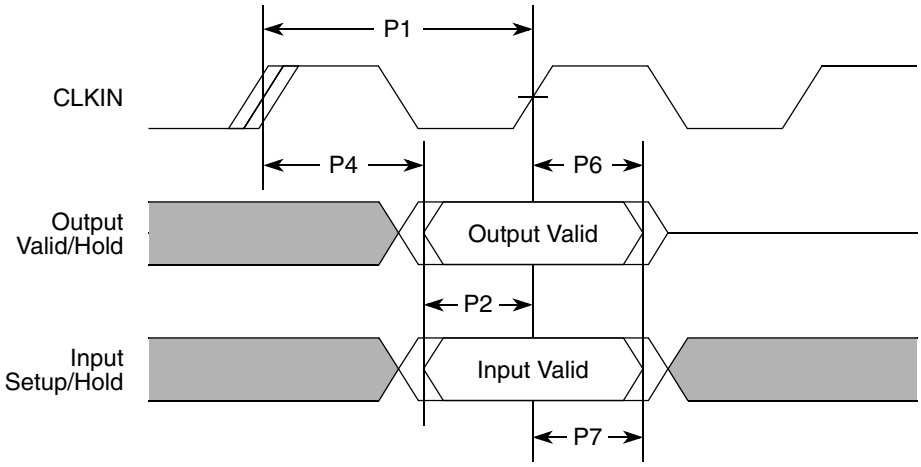

Figure 18. PCI Timing

11 Fast Ethernet AC Timing Specifications

11.1 MII/7-WIRE Interface Timing Specs

The following timing specs are defined at the chip I/O pin and must be translated appropriately to arrive at timing specs/constraints for the EMAC_10_100 I/O signals.

The following timing specs meet the requirements for MII and 7-Wire style interfaces for a range of transceiver devices. If this interface is to be used with a specific transceiver device the timing specs may be altered to match that specific transceiver.

Table 15. MII Receive Signal Timing

Num	Characteristic	Min	Max	Unit
M1	RXD[3:0], RXDV, RXER to RXCLK setup	5	—	ns
M2	RXCLK to RXD[3:0], RXDV, RXER hold	5	—	ns
M3	RXCLK pulse width high	35%	65%	RXCLK period
M4	RXCLK pulse width low	35%	65%	RXCLK period

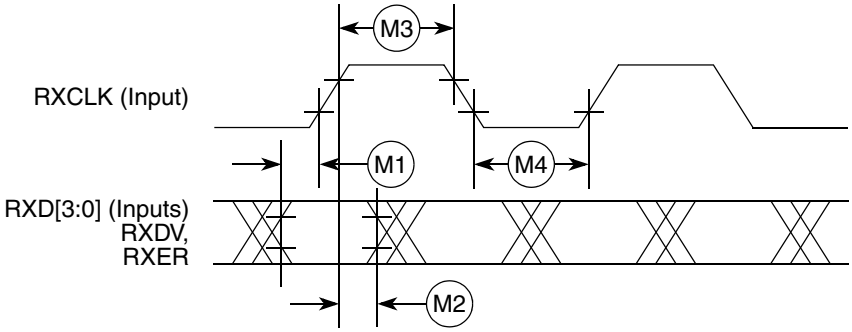

Figure 19. MII Receive Signal Timing Diagram

11.2 MII Transmit Signal Timing

Table 16. MII Transmit Signal Timing

Num	Characteristic	Min	Max	Unit
M5	TXCLK to TXD[3:0], TXEN, TXER invalid	0	—	ns
M6	TXCLK to TXD[3:0], TXEN, TXER valid	—	25	ns
M7	TXCLK pulse width high	35%	65%	TXCLK period
M8	TXCLK pulse width low	35%	65%	TXCLK period

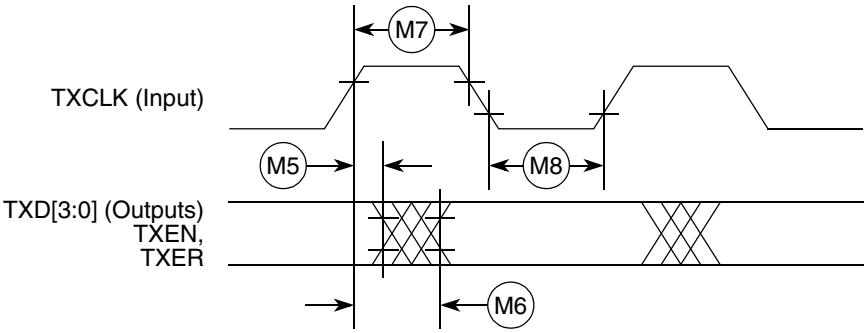

Figure 20. MII Transmit Signal Timing Diagram

11.3 MII Async Inputs Signal Timing (CRS, COL)

Table 17. MII Transmit Signal Timing

Num	Characteristic	Min	Max	Unit
M9	CRS, COL minimum pulse width	1.5	—	TX_CLK period

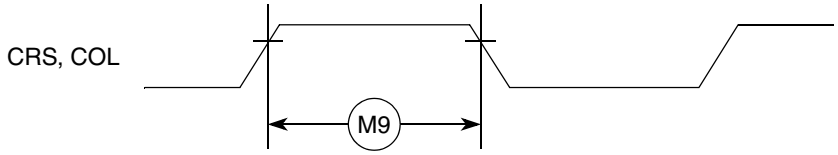

Figure 21. MII Async Inputs Timing Diagram

11.4 MII Serial Management Channel Timing (MDIO,MDC)

Table 18. MII Serial Management Channel Signal Timing

Num	Characteristic	Min	Max	Unit
M10	MDC falling edge to MDIO output invalid (min prop delay)	0	—	ns
M11	MDC falling edge to MDIO output valid (max prop delay)	—	25	ns
M12	MDIO (input) to MDC rising edge setup	10	—	ns
M13	MDIO (input) to MDC rising edge hold	0	—	ns
M14	MDC pulse width high	40%	60%	MDC period
M15	MDC pulse width low	40%	60%	MDC period

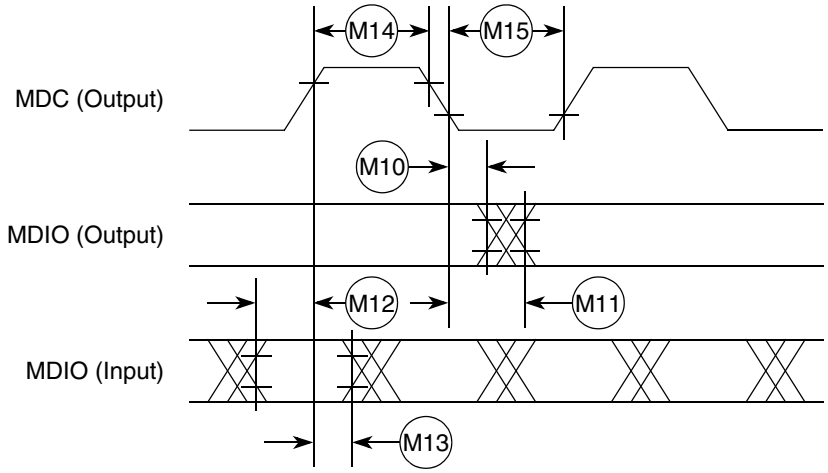

Figure 22. MII Serial Management Channel TIming Diagram

12 General Timing Specifications

Table 19 lists timing specifications for the GPIO, PSC, $\overline{DREQ}$, $\overline{DACK}$, and external interrupts.

Table 19. General AC Timing Specifications

Name	Characteristic	Min	Max	Unit
G1	CLKIN high to signal output valid	—	2	PSTCLK
G2	CLKIN high to signal invalid (output hold)	0	—	ns
G3	Signal input pulse width	2	—	PSTCLK

13 I²C Input/Output Timing Specifications

Table 20 lists specifications for the I²C input timing parameters shown in Figure 23.

Table 20. I²C Input Timing Specifications between SCL and SDA

Num	Characteristic	Min	Max	Units
I1	Start condition hold time	2	—	Bus clocks
I2	Clock low period	8	—	Bus clocks
I3	SCL/SDA rise time (V_{IL} = 0.5 V to V_{IH} = 2.4 V)	—	1	mS
I4	Data hold time	0	—	ns
I5	SCL/SDA fall time (V_{IH} = 2.4 V to V_{IL} = 0.5 V)	—	1	mS
I6	Clock high time	4	—	Bus clocks
I7	Data setup time	0	—	ns
I8	Start condition setup time (for repeated start condition only)	2	—	Bus clocks
I9	Stop condition setup time	2	—	Bus clocks

Table 21 lists specifications for the I²C output timing parameters shown in Figure 23.

Table 21. I²C Output Timing Specifications between SCL and SDA

Num	Characteristic	Min	Max	Units
I1[1]	Start condition hold time	6	—	Bus clocks
I2[1]	Clock low period	10	—	Bus clocks
I3[2]	SCL/SDA rise time (V_{IL} = 0.5 V to V_{IH} = 2.4 V)	—	—	µS
I4[1]	Data hold time	7	—	Bus clocks
I5[3]	SCL/SDA fall time (V_{IH} = 2.4 V to V_{IL} = 0.5 V)	—	3	ns
I6[1]	Clock high time	10	—	Bus clocks
I7[1]	Data setup time	2	—	Bus clocks
I8[1]	Start condition setup time (for repeated start condition only)	20	—	Bus clocks
I9[1]	Stop condition setup time	10	—	Bus clocks