Chipsmall Limited consists of a professional team with an average of over 10 year of expertise in the distribution of electronic components. Based in Hongkong, we have already established firm and mutual-benefit business relationships with customers from,Europe,America and south Asia,supplying obsolete and hard-to-find components to meet their specific needs.

With the principle of “Quality Parts,Customers Priority,Honest Operation,and Considerate Service”,our business mainly focus on the distribution of electronic components. Line cards we deal with include Microchip,ALPS,ROHM,Xilinx,Pulse,ON,Everlight and Freescale. Main products comprise IC,Modules,Potentiometer,IC Socket,Relay,Connector.Our parts cover such applications as commercial,industrial, and automotives areas.

We are looking forward to setting up business relationship with you and hope to provide you with the best service and solution. Let us make a better world for our industry!

Contact us

Tel: +86-755-8981 8866 Fax: +86-755-8427 6832
Email & Skype: info@chipsmall.com Web: www.chipsmall.com
Address: A1208, Overseas Decoration Building, #122 Zhenhua RD., Futian, Shenzhen, China

PART NO. MDSHIRA

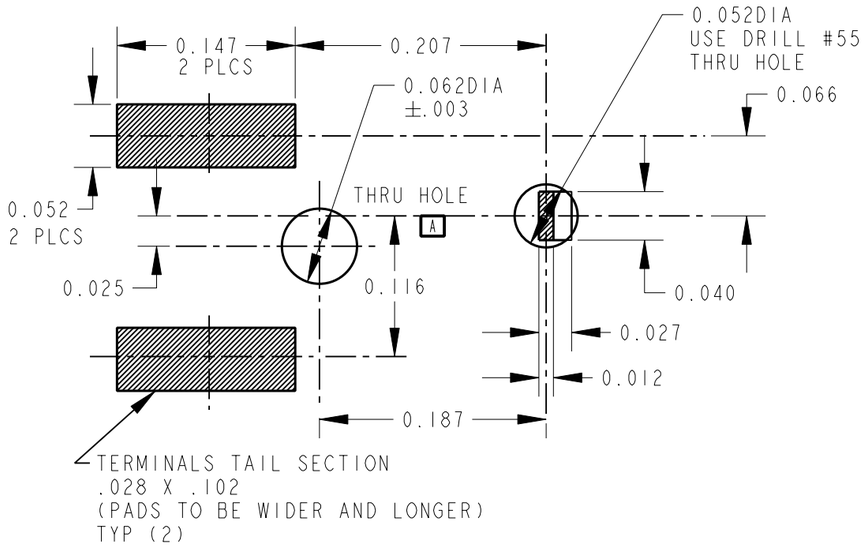

RECOMMENDED FOOTPRINT

COMPONENT SIDE

SCALE = 8 : 1

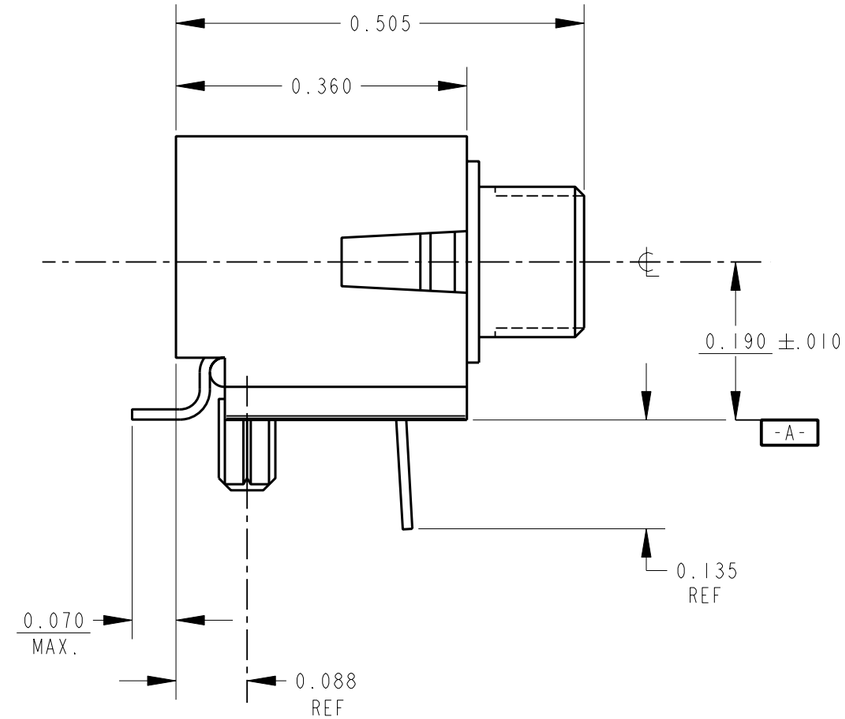

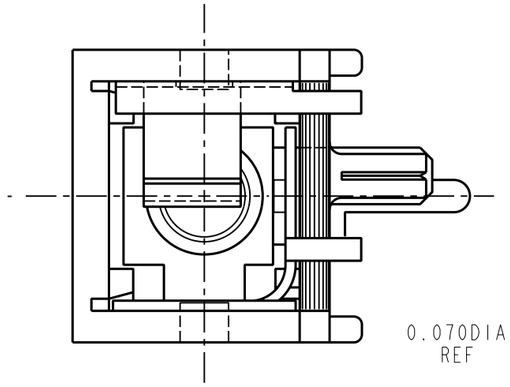

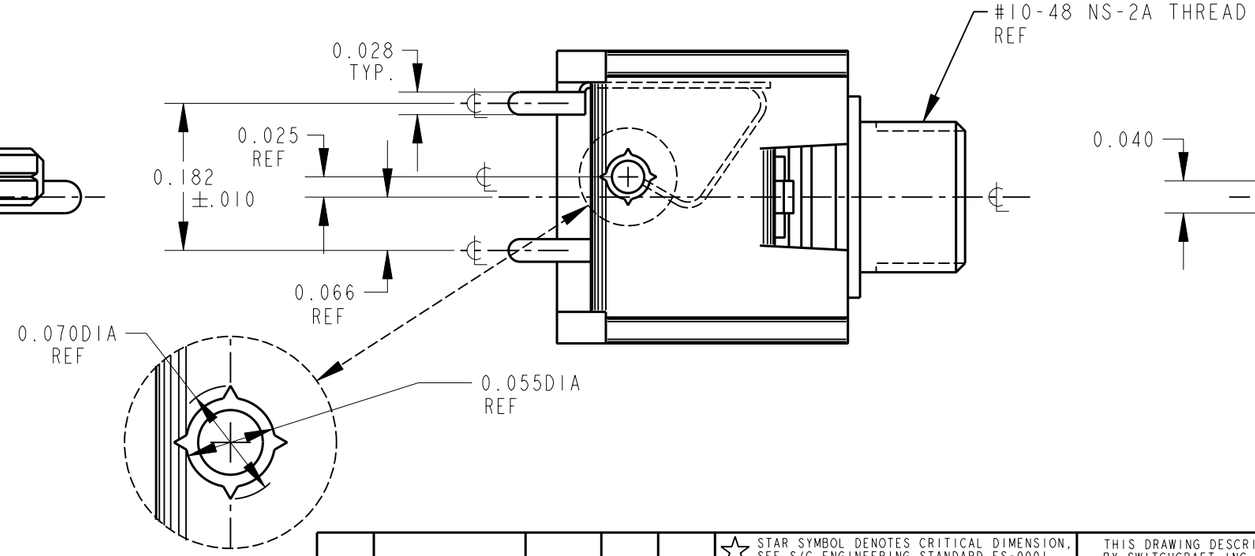

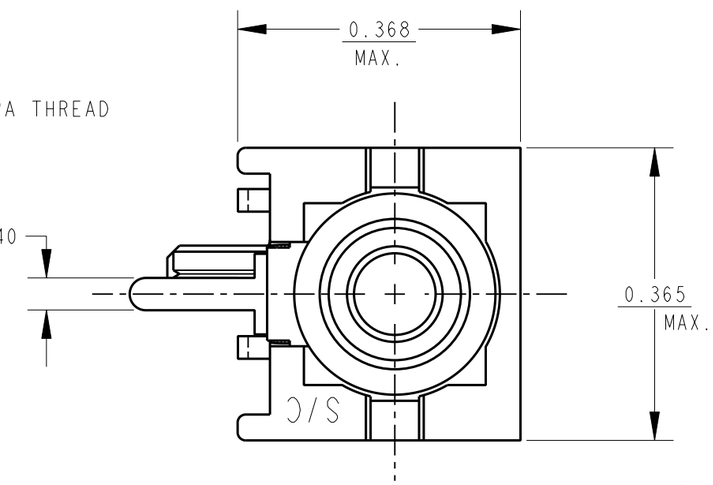

CUSTOMER DRAWING

CAD/CAM DWG. NO.
MDSHIRA_CD

SHEET 1 OF 1

NOTES:

1. MATERIAL AND FINISHES:
   - -HOUSING LIQUID CRYSTAL POLYMER U.L. RECOGNIZED 94 V-0.
   - -THREADED BUSHING: BRASS ALLOY NICKEL PLATED.
   - -TIPSPRING: PHOS. BRONZE ALLOY SELECTIVE PLATE: NICKEL AND TIN-LEAD.
   - -SLEEVE/GROUND TERMINAL, BRASS ALLOY TIN-LEAD W/NICKEL UNDERPLATE.

ISSUE	CHANGE NO.	DATE	BY	APP'D
A	FIRST DRAWN	4-22-94	ES	EBR

REVISIONS

☆ STAR SYMBOL DENOTES CRITICAL DIMENSION, SEE S/C ENGINEERING STANDARD ES-0001

UNLESS OTHERWISE SPECIFIED

1. ALL DIMENSIONS IN INCHES
2. DECIMAL DIMENSIONS ±.005
3. FRACTIONAL DIMENSIONS ±1/64
4. ANGLES ±1/2°
5. ALL DIA'S CONCENTRIC WITHIN .005 T.I.R.
6. REMOVE ALL BURRS
7. MAKE NO DIMENSIONAL ALLOWANCES FOR APPLIED FINISHES, I.E., PLATING, PAINTING, ETC.
8. HOLES ON THE SAME CENTERLINE MUST BE ALIGNED WITHIN ±.002

DO NOT SCALE DRAWING

THIS DRAWING DESCRIBES A DESIGN CONSIDERED PROPRIETARY IN NATURE, DEVELOPED AND MANUFACTURED BY SWITCHCRAFT INC. AND IS RELEASED ON A CONFIDENTIAL BASIS FOR IDENTIFICATION PURPOSE ONLY.

SIZE	WIDTH	MULT	LBS./M	TEMPER

FINISH
SPEC. NO.

MATERIAL
SPEC. NO.

FIRST USED ON
.

SCALE
1:.1875

DATE DRAWN	BY	CHK'D	APP'D
4-22-94	ES	ES 5-6-94	EBR 5-6-94

Switchcraft®

NAME
MICRO JACK
SURFACE MOUNT

PART NO.
MDSHIRA

ISSUE
A

Pro/Engineer CAD File

B

ROUTING