Chipsmall Limited consists of a professional team with an average of over 10 year of expertise in the distribution of electronic components. Based in Hongkong, we have already established firm and mutual-benefit business relationships with customers from,Europe,America and south Asia,supplying obsolete and hard-to-find components to meet their specific needs.

With the principle of “Quality Parts,Customers Priority,Honest Operation,and Considerate Service”,our business mainly focus on the distribution of electronic components. Line cards we deal with include Microchip,ALPS,ROHM,Xilinx,Pulse,ON,Everlight and Freescale. Main products comprise IC,Modules,Potentiometer,IC Socket,Relay,Connector.Our parts cover such applications as commercial,industrial, and automotives areas.

We are looking forward to setting up business relationship with you and hope to provide you with the best service and solution. Let us make a better world for our industry!

Contact us

Tel: +86-755-8981 8866 Fax: +86-755-8427 6832
Email & Skype: info@chipsmall.com Web: www.chipsmall.com
Address: A1208, Overseas Decoration Building, #122 Zhenhua RD., Futian, Shenzhen, China

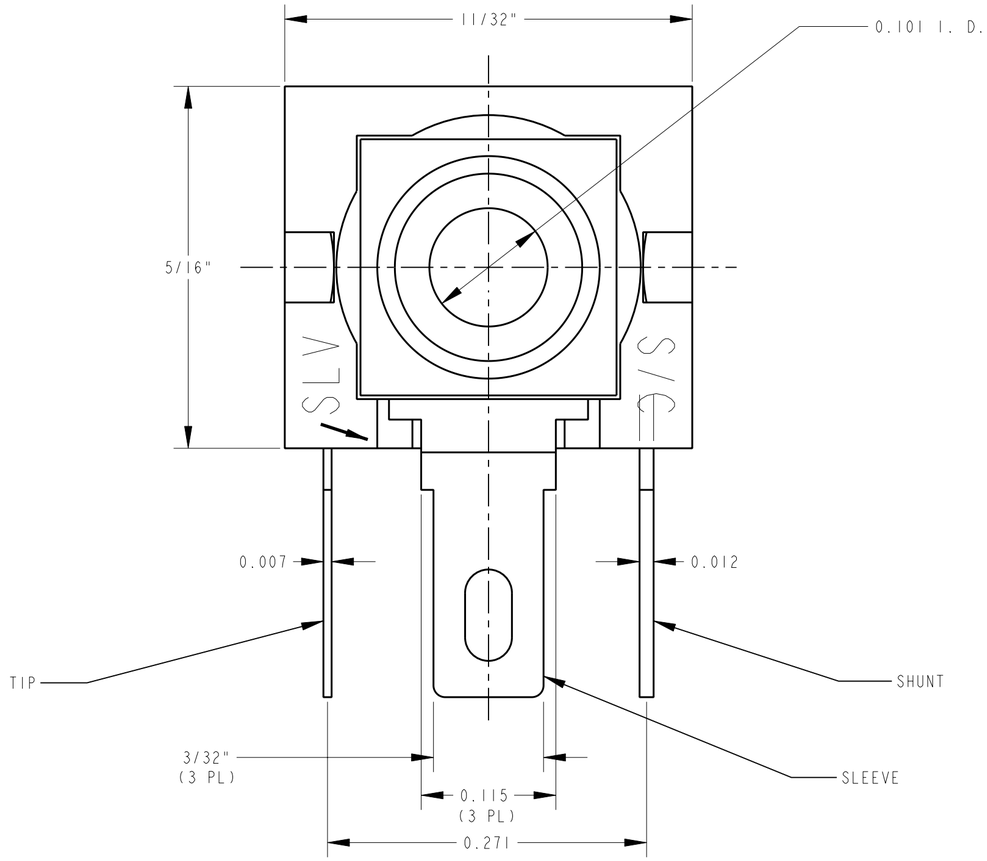

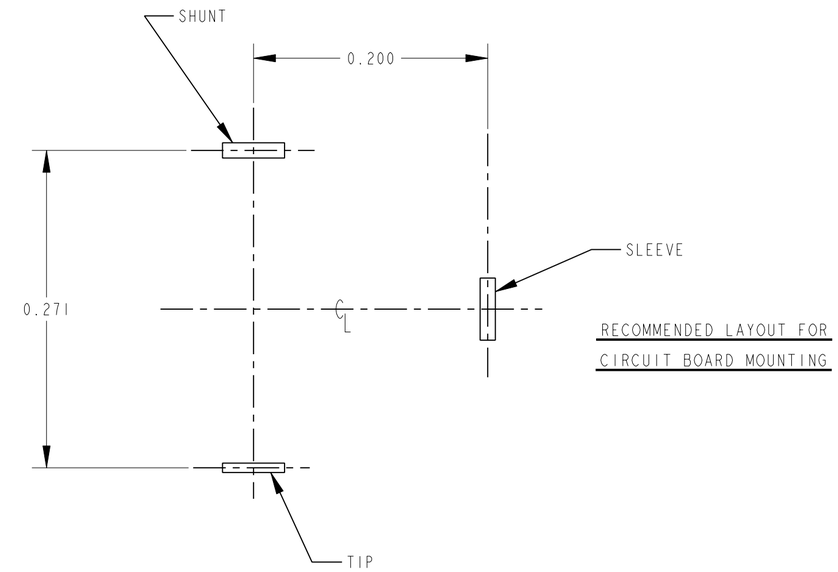

RECOMMENDED LAYOUT FOR
CIRCUIT BOARD MOUNTING

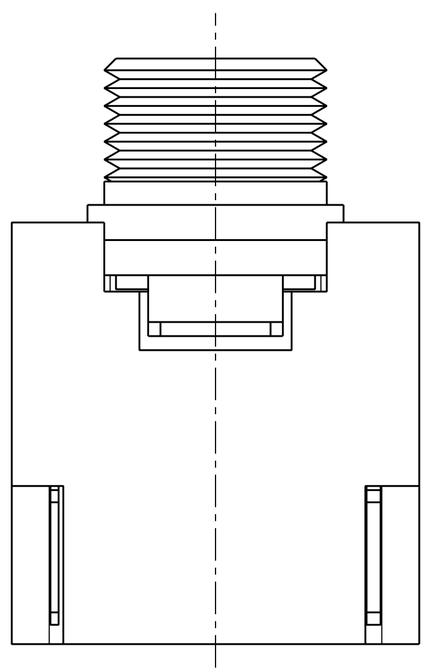

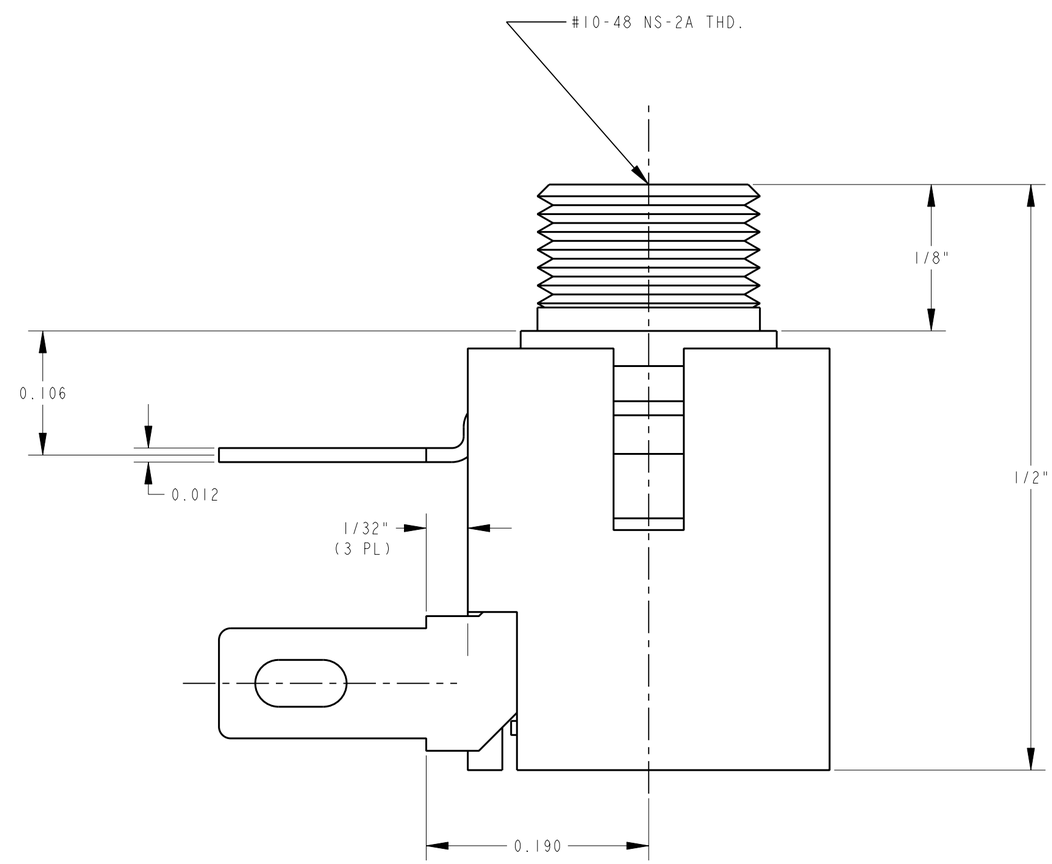

NOTES:

1. ALL DIMENSIONS ARE FOR REFERENCE ONLY.
2. HARDWARE SHIPPED UNASSEMBLED.

MATERIAL:

HOUSING: GLASS FILLED NYLON
BUSHING & MTG. HARDWARE: NICKEL PLATED BRASS
SLEEVE & SHUNT TERMINALS: SILVER PLATED COPPER ALLOY
TIP TERMINAL: SILVER PLATED BERYLCO 25

ISSUE	CHANGE NO.	DATE	BY	APP'D
D	ECO #20214	12-20-95	DEA	TAO
C	ECO #20213	12-20-95	DEA	TAO
B	REDRAWN ON CAD ECO #20211	12-20-95	DEA	TAO

REVISIONS

☆ STAR SYMBOL DENOTES CRITICAL DIMENSION, SEE S/C ENGINEERING STANDARD ES-0001

UNLESS OTHERWISE SPECIFIED

1. ALL DIMENSIONS IN INCHES
   TWO PLACE DECIMAL ±.01
   THREE PLACE DECIMAL ±.005
   FRACTIONAL DIMENSIONS ±1/64
   ANGLES ±1/2°
   ALL DIA'S CONCENTRIC WITHIN .005 T.I.R.
2. REMOVE ALL BURRS
3. MAKE NO DIMENSIONAL ALLOWANCES FOR APPLIED FINISHES, I.E., PLATING, PAINTING, ETC.
4. HOLES ON THE SAME CENTERLINE MUST BE ALIGNED WITHIN ±.002

DO NOT SCALE DRAWING

THIS DRAWING DESCRIBES A DESIGN CONSIDERED PROPRIETARY IN NATURE, DEVELOPED AND MANUFACTURED BY SWITCHCRAFT INC. AND IS RELEASED ON A CONFIDENTIAL BASIS FOR IDENTIFICATION PURPOSE ONLY.

SIZE	WIDTH	MULT	LBS./M	TEMPER
-	-	-	-	-

FINISH - SPEC. NO. -
MATERIAL - SPEC. NO. -
FIRST USED ON -
SCALE 1 = 0.1

DATE DRAWN	BY	CHK'D	APP'D
2-9-76	FGD	JRH 1-28-77	LG 1-28-77

Switchcraft®

NAME: MICRO D JAX
PART NO.: MDSL2ARA
ISSUE: D

CUSTOMER DRAWING
CAD/CAM DWG. NO.
s.mdsl2ara_cd
SHEET 1 OF 1

C ROUTING