Chipsmall Limited consists of a professional team with an average of over 10 year of expertise in the distribution of electronic components. Based in Hongkong, we have already established firm and mutual-benefit business relationships with customers from,Europe,America and south Asia,supplying obsolete and hard-to-find components to meet their specific needs.

With the principle of “Quality Parts,Customers Priority,Honest Operation,and Considerate Service”,our business mainly focus on the distribution of electronic components. Line cards we deal with include Microchip,ALPS,ROHM,Xilinx,Pulse,ON,Everlight and Freescale. Main products comprise IC,Modules,Potentiometer,IC Socket,Relay,Connector.Our parts cover such applications as commercial,industrial, and automotives areas.

We are looking forward to setting up business relationship with you and hope to provide you with the best service and solution. Let us make a better world for our industry!

Contact us

Tel: +86-755-8981 8866 Fax: +86-755-8427 6832
Email & Skype: info@chipsmall.com Web: www.chipsmall.com
Address: A1208, Overseas Decoration Building, #122 Zhenhua RD., Futian, Shenzhen, China

Multi output SAW Oscillator (MOSO)
OUTPUT : HCSL

MG7050HAN

Pb Free
RoHS Compliant

Product Number (please contact us)
X1M000431xxxx00

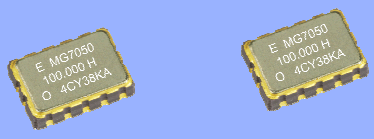

Actual size

Feature
- Ultra Low jitter : 0.3 ps Max.
- 2 or 4 outputs and it is able to reduce fan-out buffers
- Frequency range : 100 MHz to 200 MHz
- Supply voltage : 2.5 V / 3.3 V
- External dimensions : 7.0 × 5.0 × 1.6 mm
- Output : HCSL (2 or 4 outputs)
- Output impedance select by ZSEL

Application
GbE, Fiber Channel, SAS, PCI express

Specifications (characteristics)

Item	Symbol	Specifications		Conditions / Remarks	
Output frequency range	f_0	100 MHz to 200 MHz		Please contact us about available frequencies.	
		100 MHz, 125 MHz, 156.25 MHz, 200 MHz		Standard frequency	
Supply voltage	V_{CC}	D: 2.5 V ± 0.125 V	C: 3.3 V ± 0.33 V	V_{CC},V_{CC}1 and V_{CC}2 need same voltage	
Storage temperature	T_stg	-55 ºC to +125 ºC		Store as bare product after packing	
Operating temperature	T_use	A: 0 ºC to +70 ºC, B: -20 ºC to +70 ºC D: -5 ºC to +85 ºC			
Frequency tolerance *1	f_tol	J: ±50 × 10^{-6}, L: ±100 × 10^{-6}			
Current consumption	I_{CC}	55 mA Typ., 84 mA Max.	60 mA Typ., 90 mA Max.	2-outputs	OE=V_{CC}, with L_HCSL
		95 mA Typ., 128 mA Max.	100 mA Typ., 136 mA Max.	4-outputs	
Disable current	I_dis	11 mA Typ., 23 mA Max.	12 mA Typ., 25 mA Max.	2-outputs	OE=GND
		15 mA Typ., 28 mA Max.	16 mA Typ., 30 mA Max.	4-outputs	
Symmetry	SYM	45 % to 55 %		At outputs crossing point	
Output voltage	V_{OH}	0.66 V to 0.85 V		DC characteristics	
	V_{OL}	-0.15 V to 0.15 V			
Output load condition	L_HCSL	50 Ω or 42.2 Ω, with C_L=2 pF, Rs=33 Ω or 27 Ω			
Input voltage	V_{IH}	70% V_{CC} Min.		OE and ZSEL terminals	
	V_{IL}	30% V_{CC} Max.			
Rise / Fall skew rate	R_r/R_f	1 V/ns to 4 V/ns		Between -0.15 V and 0.15 V of differential output.	
Start-up time	t_str	5 ms Typ., 10 ms Max.		Time at minimum supply voltage to be 0 s	
Phase Jitter	t_{PJ}	0.19 ps Typ.	0.16 ps Typ.	f_0=100 MHz	Offset frequency: 12 kHz to 20 MHz
		0.18 ps Typ.	0.15 ps Typ.	f_0=125 MHz	
		0.16 ps Typ.	0.13 ps Typ.	f_0=156.25 MHz	
		0.14 ps Typ.	0.12 ps Typ.	f_0=200 MHz	
		0.3 ps Max.			
Skew	t_skew	20 ps Typ., 50 ps Max.		ZSEL=H	
Aging	f_age	N: ±10 × 10^{-6}/ year Max.		First year	+25 °C, V_{CC}=2.5 V, 3.3 V
		A: Included in Frequency tolerance *2		10 years	

*1 Frequency tolerance includes initial frequency tolerance, temperature variation, supply voltage change and reflow drift.
*2 "A" is not acceptable when Frequency tolerance is "J" and Operating temperature is "B" or "D".

Product Name (Standard form)

MG7050 H AN 156.250000MHz 4 A C J A N (⑦⑧⑨:JDA, JBA are not available)
① ② ③ ④ ⑤ ⑥ ⑦ ⑧ ⑨

①Model
②Output (H: HCSL)
③Frequency
④Number of outputs (2: 2outputs, 4: 4outputs)
⑤"A": Fixed
⑥Supply voltage
⑦Frequency tolerance
⑧Operating temperature
⑨Frequency aging

⑥Supply voltage	
C	3.3 V Typ.
D	2.5 V Typ.

⑦Frequency tolerance	
J	±50 × 10^{-6}
L	±100 × 10^{-6}

⑧Operating temp.	
A	0 to +70℃
B	-20 to +70℃
D	-5 to +85℃

⑨Frequency aging	
A	Frequency tolerance include aging
N	Frequency tolerance exclude aging

Block diagram

2-outputs

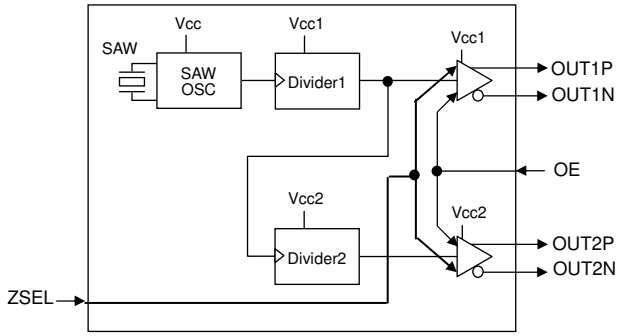

4-outputs

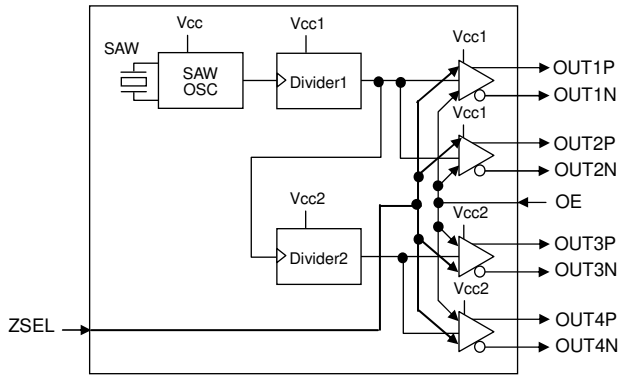

ZSEL function

		Output line Differential Zo	HCSL load L_HCSL	Shunt resistor Rs
ZSEL	H	100 Ω	50 Ω	33 Ω
	L	85 Ω	42.2 Ω	27 Ω

External dimensions (Unit :mm)

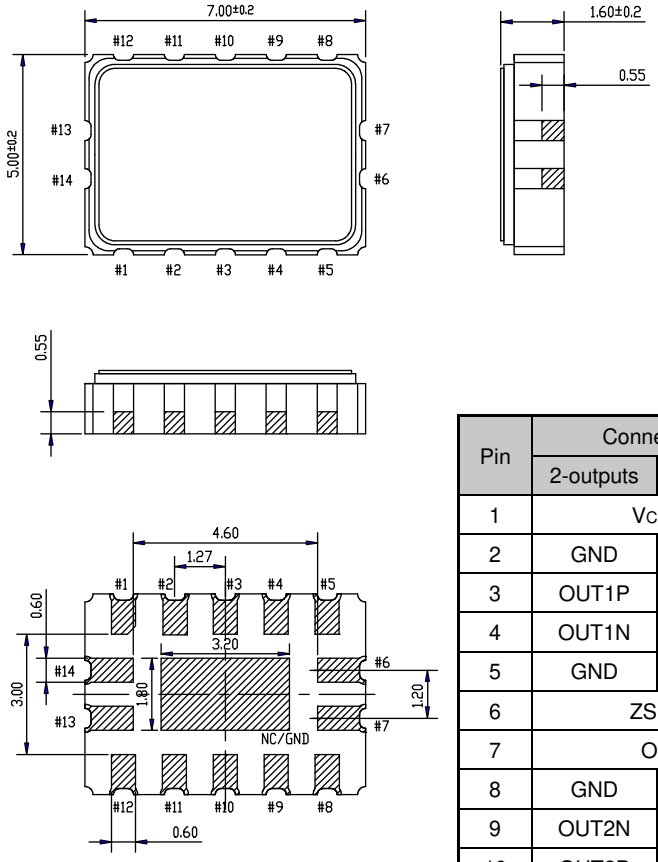

Pin	Connection	
	2-outputs	4-outputs
1	Vcc1	
2	GND	OUT1P
3	OUT1P	OUT1N
4	OUT1N	OUT2P
5	GND	OUT2N
6	ZSEL	
7	OE	
8	GND	OUT3N
9	OUT2N	OUT3P
10	OUT2P	OUT4N
11	GND	OUT4P
12	Vcc2	
13	Vcc	
14	GND	

OE pin = "H" : Specified frequency output.
OE pin = "L" : Output is high impedance
#14 is connected to the cover.

Footprint (Recommended) (Unit :mm)

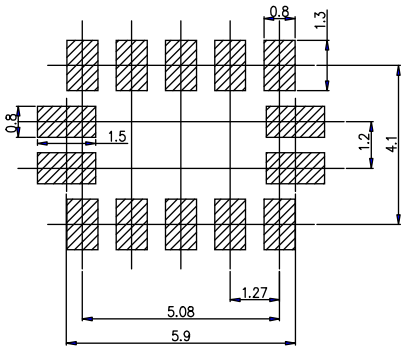

To maintain stable operation, provide a 0.01 μF to 0.1 μF by-pass capacitor at a location as near as possible to the power source terminal of the crystal product (between V_{CC}, $V_{CC}1$, $V_{CC}2$ - GND).

PROMOTION OF ENVIRONMENTAL MANAGEMENT SYSTEM CONFORMING TO INTERNATIONAL STANDARDS

At Seiko Epson, all environmental initiatives operate under the Plan-Do-Check-Action (PDCA) cycle designed to achieve continuous improvements. The environmental management system (EMS) operates under the ISO 14001 environmental management standard.

All of our major manufacturing and non-manufacturing sites, in Japan and overseas, completed the acquisition of ISO 14001 certification.

ISO 14000 is an international standard for environmental management that was established by the International Standards Organization in 1996 against the background of growing concern regarding global warming, destruction of the ozone layer, and global deforestation.

WORKING FOR HIGH QUALITY

In order provide high quality and reliable products and services than meet customer needs,

Seiko Epson made early efforts towards obtaining ISO9000 series certification and has acquired ISO9001 for all business establishments in Japan and abroad. We have also acquired ISO/TS 16949 certification that is requested strongly by major automotive manufacturers as standard.

ISO/TS16949 is the international standard that added the sector-specific supplemental requirements for automotive industry based on ISO9001.

►Explanation of the mark that are using it for the catalog

Pb Free	►Pb free.
RoHS Compliant	►Complies with EU RoHS directive. *About the products without the Pb-free mark. Contains Pb in products exempted by EU RoHS directive. (Contains Pb in sealing glass, high melting temperature type solder or other.)
For Automotive	►Designed for automotive applications such as Car Multimedia, Body Electronics, Remote Keyless Entry etc.
Automotive Safety	►Designed for automotive applications related to driving safety (Engine Control Unit, Air Bag, ESC etc).