Chipsmall Limited consists of a professional team with an average of over 10 year of expertise in the distribution of electronic components. Based in Hongkong, we have already established firm and mutual-benefit business relationships with customers from,Europe,America and south Asia,supplying obsolete and hard-to-find components to meet their specific needs.

With the principle of “Quality Parts,Customers Priority,Honest Operation,and Considerate Service”,our business mainly focus on the distribution of electronic components. Line cards we deal with include Microchip,ALPS,ROHM,Xilinx,Pulse,ON,Everlight and Freescale. Main products comprise IC,Modules,Potentiometer,IC Socket,Relay,Connector.Our parts cover such applications as commercial,industrial, and automotives areas.

We are looking forward to setting up business relationship with you and hope to provide you with the best service and solution. Let us make a better world for our industry!

Contact us

Tel: +86-755-8981 8866 Fax: +86-755-8427 6832
Email & Skype: info@chipsmall.com Web: www.chipsmall.com
Address: A1208, Overseas Decoration Building, #122 Zhenhua RD., Futian, Shenzhen, China

The drawing on this print and information therewith are proprietary to Varitronix and shall not be used in whole or in part without written permission of Varitronix.

ISSUE	AMENDMENT	DATE
1	UPDATE DIMENSION ADD THE NOTES	02.04.20
2	CHANGE DIMENSION	02.12.23
3	CHANGE BACKLIGHT	03.02.27
4	ADD LED05	03.09.01
5	REDRAWE	03.10.21
6	ADD BOTTOM VIEW AND DETAIL DRAWING A UPDATE DIMENSION	05.08.25

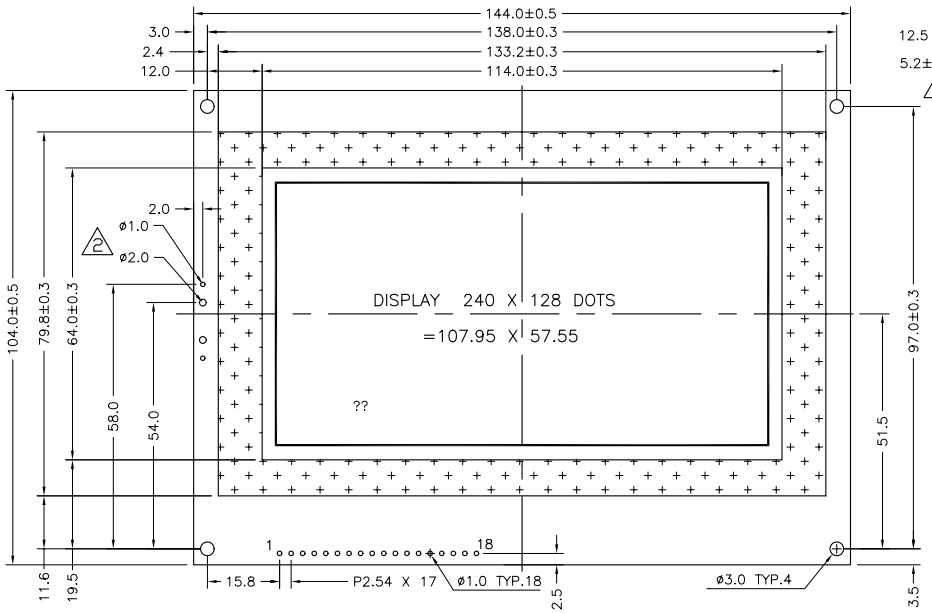

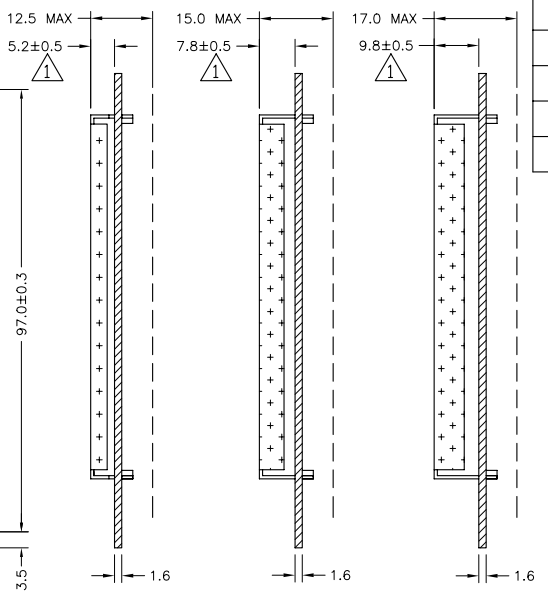

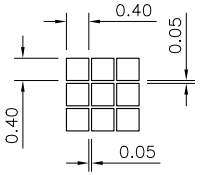

(DOTS SIZE FOR CUSTOMER REFERENCE)

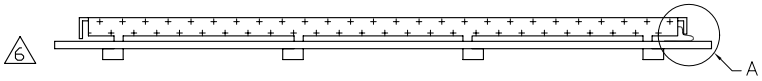

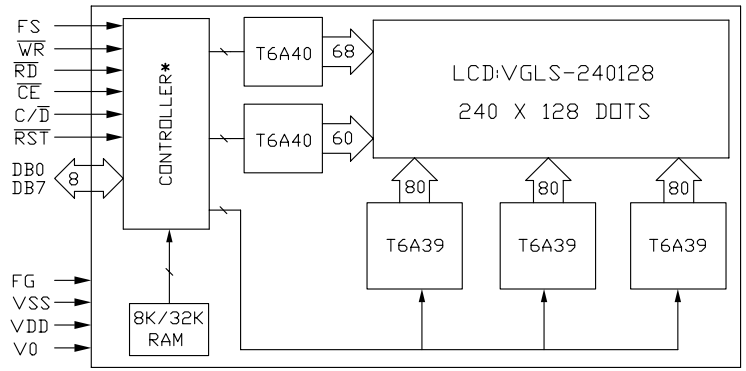

*T6963C OR EQUIVALENT

DETAIL A

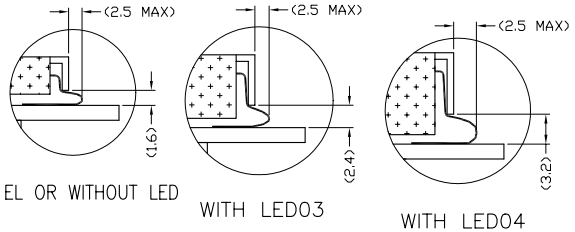

WITH EL OR WITHOUT LED
WITH LED03
WITH LED04

1	2	3	4	5	6	7	8	9	10	11	12	13	14	15	16	17	18
FG	VSS	VDD	V0	/WR	/RD	/CE	C/D	/RST	DB0	DB1	DB2	DB3	DB4	DB5	DB6	DB7	FS

NOTES:
1. ◇ : SPECIAL CHARACTERISTIC
2. + : SAFETY CHARACTERISTIC
3. ▽ : CRITICAL DIMENSION
4. (...) : REFERENCE DIMENSION

VARITRONIX LIMITED

TITLE: LCM Module Specification
PROJECT NO: MGLS240128T

TOLERANCE UNLESS OTHERWISE SPECIFIED:	X.X ±0.3 X.XX ±0.1
DIMENSIONS IN MM	ANGULAR: ± 1°
MATERIAL: N/A	FINISH: N/A
SCALE: DO NOT ON SCALE	OVERALL THK: N/A
THIRD ANGLE PROJECTION	

	NAME	SIGN	DATE
DRAWN:	XB LONG		
CHECKED:	ZB TANG		
APPROVED:	CHARM		

ITEM NO.: MGLS240128T-XX
DESCRIPTION: MGLS240128T
FILE NO: MGLS240128T-XX R6 REV: 6
SHEET 1 OF 2

The drawing on this print and information therewith are proprietary to Varitronix and shall not be used in whole or in part without written permission of Varitronix.

ISSUE	AMENDMENT	DATE
1	UPDATE DIMENSION ADD THE NOTES	02.04.20
2	CHANGE DIMENSION	02.12.23
3	CHANGE BACKLIGHT	03.02.27
4	ADD LED05	03.09.01
5	REDRAW	03.10.21
6 3	ADD BOTTOM VIEW AND DETAIL DRAWING A UPDATE DIMENSION	05.08.25

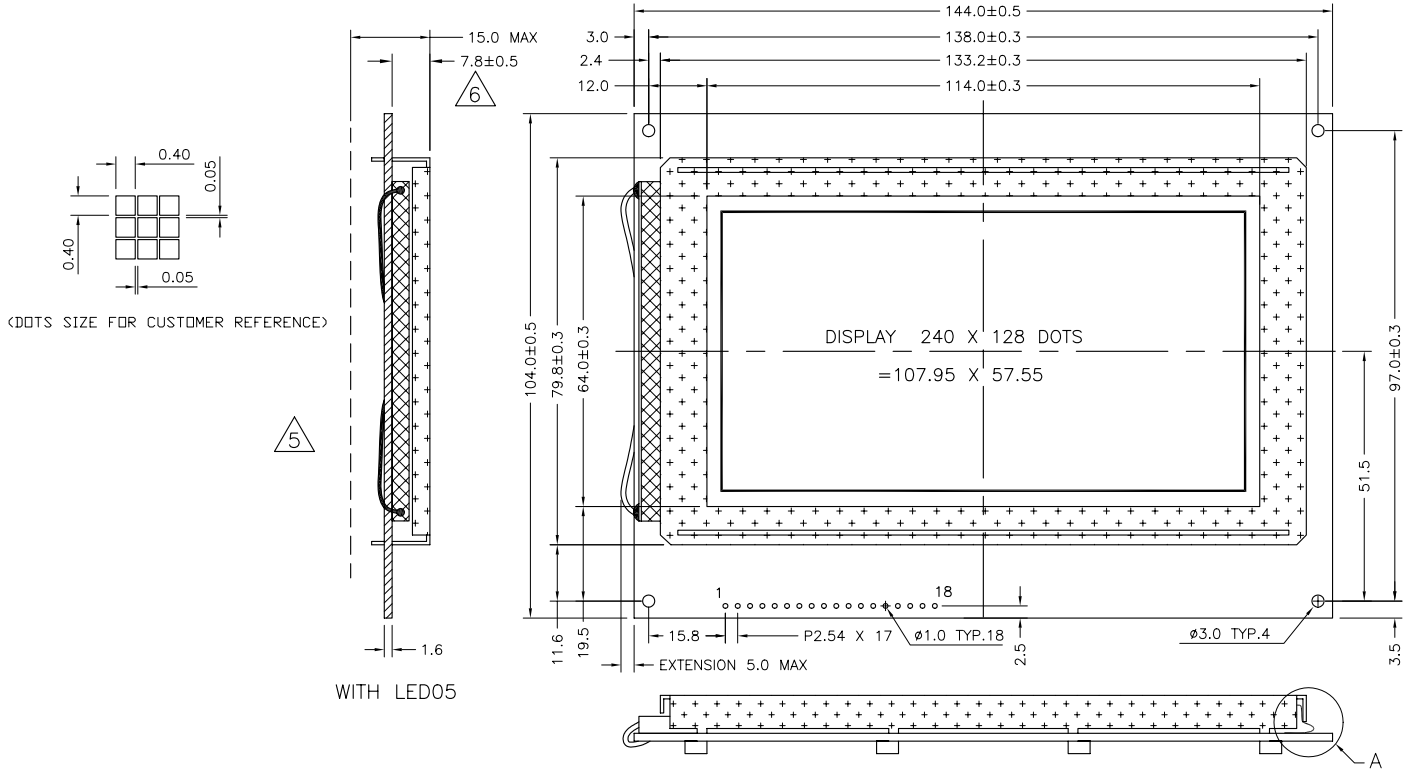

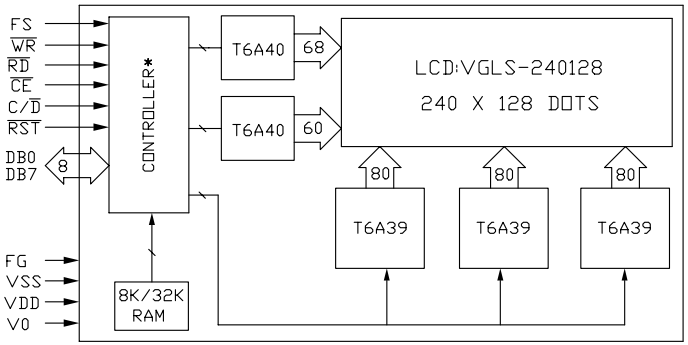

*T6963C OR EQUIVALENT

1	2	3	4	5	6	7	8	9	10	11	12	13	14	15	16	17	18
FG	VSS	VDD	V0	/WR	/RD	/CE	C/D	/RST	DB0	DB1	DB2	DB3	DB4	DB5	DB6	DB7	FS

NOTES:
1. ◇ : SPECIAL CHARACTERISTIC
2. + : SAFETY CHARACTERISTIC
3. ▽ : CRITICAL DIMENSION
4. (...) : REFERENCE DIMENSION

VARITRONIX LIMITED

TITLE: LCM Module Specification

PROJECT NO: MGLS240128T

TOLERANCE UNLESS OTHERWISE SPECIFIED:	X.X ±0.3 X.XX ±0.1
DIMENSIONS IN MM	ANGULAR: ± 1°
MATERIAL: N/A	FINISH: N/A
SCALE: DO NOT ON SCALE	OVERALL THK: N/A

THIRD ANGLE PROJECTION

	NAME	SIGN	DATE
DRAWN:	XB LONG		
CHECKED:	ZB TANG		
APPROVED:	CHARM		

ITEM NO.: MGLS240128T-XX

DESCRIPTION: MGLS240128T

FILE NO: MGLS240128T-XX R6 | REV: 6

SHEET 2 OF 2