Chipsmall Limited consists of a professional team with an average of over 10 year of expertise in the distribution of electronic components. Based in Hongkong, we have already established firm and mutual-benefit business relationships with customers from,Europe,America and south Asia,supplying obsolete and hard-to-find components to meet their specific needs.

With the principle of “Quality Parts,Customers Priority,Honest Operation,and Considerate Service”,our business mainly focus on the distribution of electronic components. Line cards we deal with include Microchip,ALPS,ROHM,Xilinx,Pulse,ON,Everlight and Freescale. Main products comprise IC,Modules,Potentiometer,IC Socket,Relay,Connector.Our parts cover such applications as commercial,industrial, and automotives areas.

We are looking forward to setting up business relationship with you and hope to provide you with the best service and solution. Let us make a better world for our industry!

Contact us

Tel: +86-755-8981 8866 Fax: +86-755-8427 6832
Email & Skype: info@chipsmall.com Web: www.chipsmall.com
Address: A1208, Overseas Decoration Building, #122 Zhenhua RD., Futian, Shenzhen, China

VARITRONIX GRAPHIC LCD MODULE

FORMAT = 240x64

MGLS-24064-C-HV-G-LED3G

Provided with 2-position cable harness pre-assembled for LED Backlight access
Provided with 10x2-position pin-header.

DOCUMENT TITLE:

SPECIFICATION

OF

LCD MODULE TYPE

P.I.D.#/**ITEM NO.: VLMS4044-02**

DEPARTMENT	NAME	SIGNATURE	DATE
PREPARED BY	PHILIP CHENG		2002.7.4
CHECKED BY	Z.B.HE	Hezubing	7.4.2002
APPROVED BY	CYRUS CHEUNG	Cs	2002/7/4

VL Electronics
*a subsidiary of **Varitronix** International Group*
3250 Wilshire Blvd, suite 1901 • Los Angeles • CA 90010-1502
Voice: (213) 738-8700 • Fax: (213) 738-5340 • E-mail: sales@vle.com

Varitronix

DISTRIBUTION LIST: MARKETING

DOCUMENT REVISION HISTORY1:

DOCUMENT REVISION FROM	TO	DATE	DESCRIPTION	CHANGED BY	CHECKED BY
0.0		2001.06.11	FirstRelease.	PHILIP CHENG	C.M.LUN
0.0	B	2002.07.04	Items1to2wereupdated. 1.)(Wholedocument) Thenumbersofpageswere updated. 2.)(Page8,table5) Minimumvalueandmaximum valueofsupplyvoltage(LED03 backlight)werechangedfrom4.0V and4.2Vto3.9Vand4.3V respectively.	PHILIP CHENG	Z.B.HE

CONTENTS

		PAGE
1.	GENERAL DESCRIPTION	4
2.	MECHANICAL SPECIFICATION	4
3.	ABSOLUTE MAXIMUM RATINGS	6
3.1	ELECTRICAL MAXIMUM RATINGS (Ta = 25°C)	6
3.2	ENVIRONMENTAL CONDITION	6
4.	ELECTRICAL SPECIFICATION	7
4.1	INTERFACE SIGNALS	7
4.2	TYPICAL ELECTRICAL CHARACTERISTICS	8
4.3	TIMING SPECIFICATIONS	9
4.4	TIMING DIAGRAM OF Vdd AGAINST V0	10
5.	LED BACKLIGHT	11
6.	GLASS MECHANICAL LCD ONLY .	12

VARITRONIX GRAPHIC LCD MODULE
FORMAT = 240x64

MGLS-24064-C-HV-G-LED3G
Provided with 2-position cable harness pre-assembled for LED Backlight access
Provided with 10x2-position pin-header.

VARITRONIXLIMITED

Specification

VARITRONIX GRAPHIC LCD MODULE
FORMAT = 240x64

MGLS-24064-C-HV-G-LED3G
Provided with 2-position cable harness pre-assembled for LED Backlight access
Provided with 10x2-position pin-header.

1. (

- 240x64dotmatrixSTNSTD2PositiveYellow-GreenTransflectiveLCDGraphicModule.
- Drivingscheme:1/64duty,1/9bias.
- ViewingAngle:6O'clockdirection.
- 'Toshiba'T6963C(flatpack)orequivalentLCDcontroller.
- 'Toshiba'T6A39(flatpack)orequivalentLCDsegmentdrivers.
- 'Toshiba'T6A40(flatpack)orequivalentLCDcommondrivers.
- 8KbytedisplaySRAM.
- Yellow-greenLED03backlight.
- Connector:10pinsx2rowsmaleconnector.
- Connectorassembly.

2. MechanicalSpecifications

ThemechanicaldetailisshowninFig.1andsummarizedinTable1below.

Table1

Parameter	Specifications	Unit
Outlinedimensions	180.0(W)x65.0(H)x14.0MAX.(D)(excludedconnectors)	mm
Effectiveviewingarea	132.0(W)x39.0(H)	mm
Activearea	127.15(W)x33.87(H)	mm
Displayformat	240(Horizontal)x64(Vertical)	dots
Dotsize	0.48(W)x0.48(H)	mm
Dotspacing	0.05(W)x0.05(H)	mm
Dotpitch	0.53(W)x0.53(H)	mm
Weight:	Approx.154.3	grams

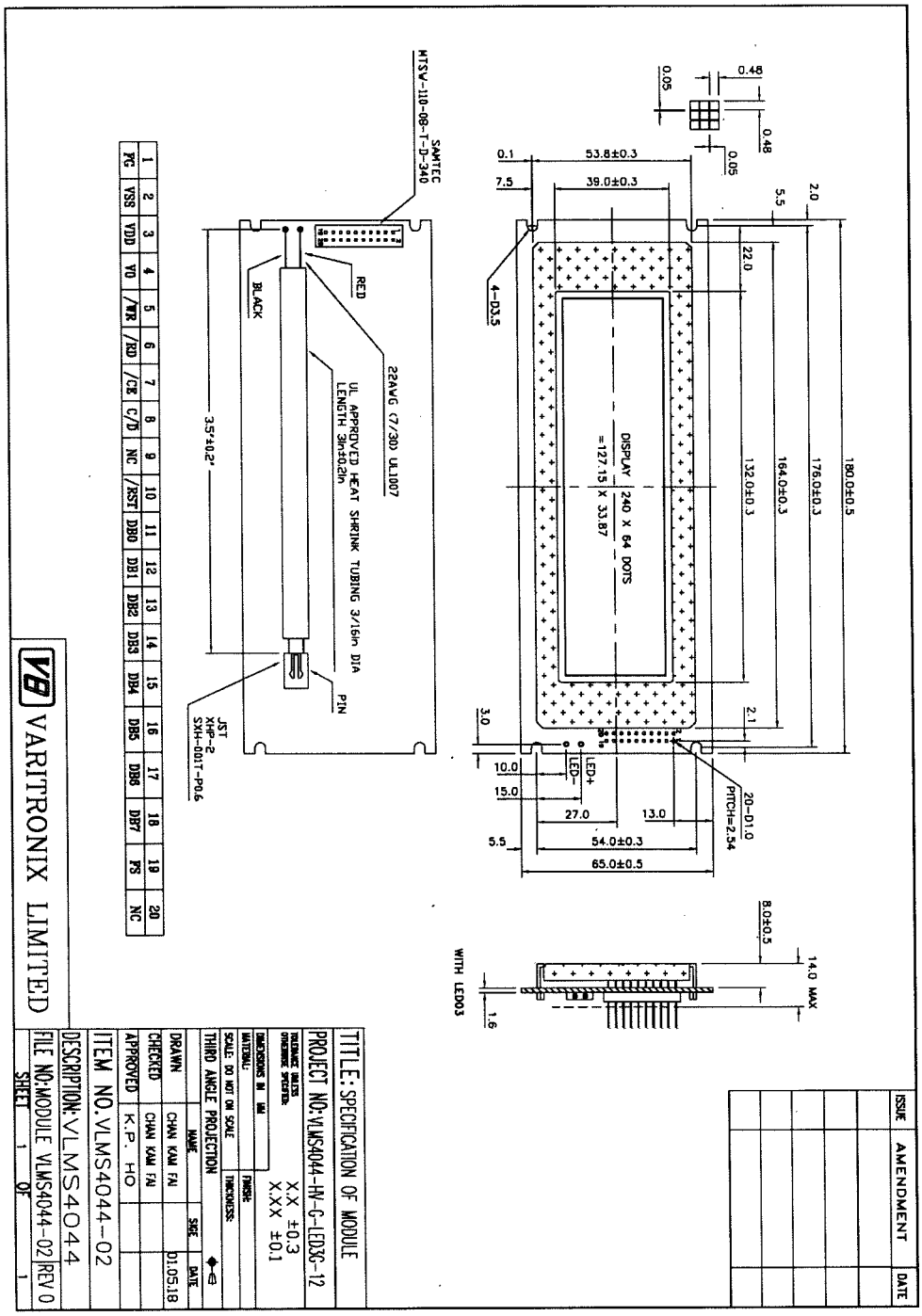

1	2	3	4	5	6	7	8	9	10	11	12	13	14	15	16	17	18	19	20
FG	VSS	VDD	V0	/WR	/RD	/CE	C/D	NC	/RST	DB0	DB1	DB2	DB3	DB4	DB5	DB6	DB7	FS	NC

Figure1:SpecificationofVLMS4044-ZEBRAVERSIONmodule.

VARITRONIX GRAPHIC LCD MODULE FORMAT = 240x64
MGLS-24064-C-HV-G-LED3G

Provided with 2-position cable harness pre-assembled for LED Backlight access
Provided with 10x2-position pin-header.

VL Electronics
a subsidiary of Varitronix International Group
3250 Wilshire Blvd, suite 1901 • Los Angeles • CA 90010-1502
Voice: (213) 738-8700 • Fax: (213) 738-5340 • E-mail: sales@vle.com

Varitronix

3. AbsoluteMaximumRatings

3.1 ElectricalMaximumRatings(Ta=25°C)

Table2

Parameter	Symbol	Min.	Max.	Unit
Supplyvoltage(Logic)	VDD-VSS	0	6.0	V
Supplyvoltage(LCDdrive)	VLCD=VDD–V0	0	28.0	V
Inputvoltage	Vin	0	V_{DD}	V

Note:

Themodulesmaybedestroyediftheyareusedbeyondtheabsolutemaximumratings.

AllvoltagevaluesarereferencedtoVSS=0V.

3.2 EnvironmentalCondition

Table3

Item	Operating Temperature (Topr)		Storage Temperature (Tstg)		Remark
	Min.	Max.	Min.	Max.	
mbientTemperature	0°C	+50 °C	-20 °C	+60 °C	Dry
Humidity	95%max.RHforTa ≤ 40 °C <95%RHforTa>40 °C				nocondensation
Vibration(IEC68-2-6) cellsmustbemounted onasuitableconnector	Frequency: 10 ~ 55Hz Amplitude: 0.75mm Duration:20cyclesineachdirection.				3directions
Shock(IEC68-2-27) Half-sinepulseshape	Pulseduration:11ms Peakacceleration:981m/s^2 =100g Number of shocks : 3 shocks in 3 mutuallyperpendicularaxes.				3directions

4. ElectricalSpecifications

4.1. Interfacesignals

Table4

PinNo.	Symbol	Description
1	FG	Frameground(seenote1)
2	Vss	Ground(0V).
3	VDD	Powersupplyforlogic(+5V)
4	V0	PowersupplyforLCDdrive
5	/WR	Datawrite.WritedatatocontrollerT6963Cwhen“L”.
6	/RD	Dataread.ReaddatafromcontrollerT6963Cwhen“L”.
7	/CE	Chipenableofcontrollerwhen”L”.
8	— C/D	Command/Dataread/write. “H”forcommandread/writeand “L”fordataread/write.
9	NC	Notconnected
10	/RST	Controllerresetwhen“L”.
11	DB0	Datainput/output(LSB)
12	DB1	Datainput/output
13	DB2	Datainput/output
14	DB3	Datainput/output
15	DB4	Datainput/output
16	DB5	Datainput/output
17	DB6	Datainput/output
18	DB7	Datainput/output(MSB)
19	FS	Fontselect.”H”for6x8font& ”L”for8x8font
20	NC	Notconnected
-	LED(+)	AnodeofLEDbacklight
-	LED(-)	CathodeofLEDbacklight

Note1: Thispiniselectricallyconnectedtothemetalbezel(frame).
Usercanchoosetoconnectthispintoe VSSorleaveitopen.

4.2 TypicalElectricalCharacteristics

AtTa=25 °C,VDD=5V ±5%,VSS=0V.

Table5

Parameter	Symbol	Conditions	Min.	Typ.	Max.	Unit
Supplyvoltage (Logic)	V_{DD}-Vss		4.75	5.00	5.25	V
Supplyvoltage(LCD)	VLCD =V_{DD}–V0	V_{DD}=5V,Note 1	13.9	14.6	15.3	V
Inputsignalvoltage	VIN	"H"level	V_{DD}-2.2	-	V_{DD}	V
		"L"level	0	-	0.8	V
Supplycurrent (Logic&LCD)	I_{DD}	V_{DD}=5V, Charactermode	-	8.7	13.2	mA
		V_{DD}=5V, Checkerboard mode	-	9.1	13.8	mA
Supplycurrent(LCD)	I0	V_{DD}=5V, Charactermode, Note1	-	3.2	4.9	mA
		V_{DD}=5V, Checkerboard mode, Note1	-	3.4	5.3	mA
Supplyvoltage (LED03backlight)	V_{LED03}	Forwardcurrent =22x10 =220mA NumberofLED chips =22x2 =44	3.9	4.1	4.3	V

Note(1):
ThereistoleranceinoptimumLCDdrivingvoltageduringproductionanditwillbewithin thespecifiedrange.

4.3 TimingSpecifications

AtTa=0 °CTo+50 °C,VDD=5V ±5%,VSS=0V

RefertoFig.2,thebustimingdiagram.

Table6

Parameter	Symbol	Min.	Max.	Unit
C/$\overline{D}$Set-uptime	t_{CDS}	100	-	ns
C/$\overline{D}$HoldTime	t_{CDH}	10	-	ns
/CE,/RD,/WRPulseWidth	t_{CE},t_{RD} ,t_{WR}	80	-	ns
DataSet-upTime	t_{DS}	80	-	ns
DataHoldTime	t_{DH}	40	-	ns
AccessTime	t_{ACC}	-	150	ns
OutputHoldTime	t_{OH}	10	50	ns

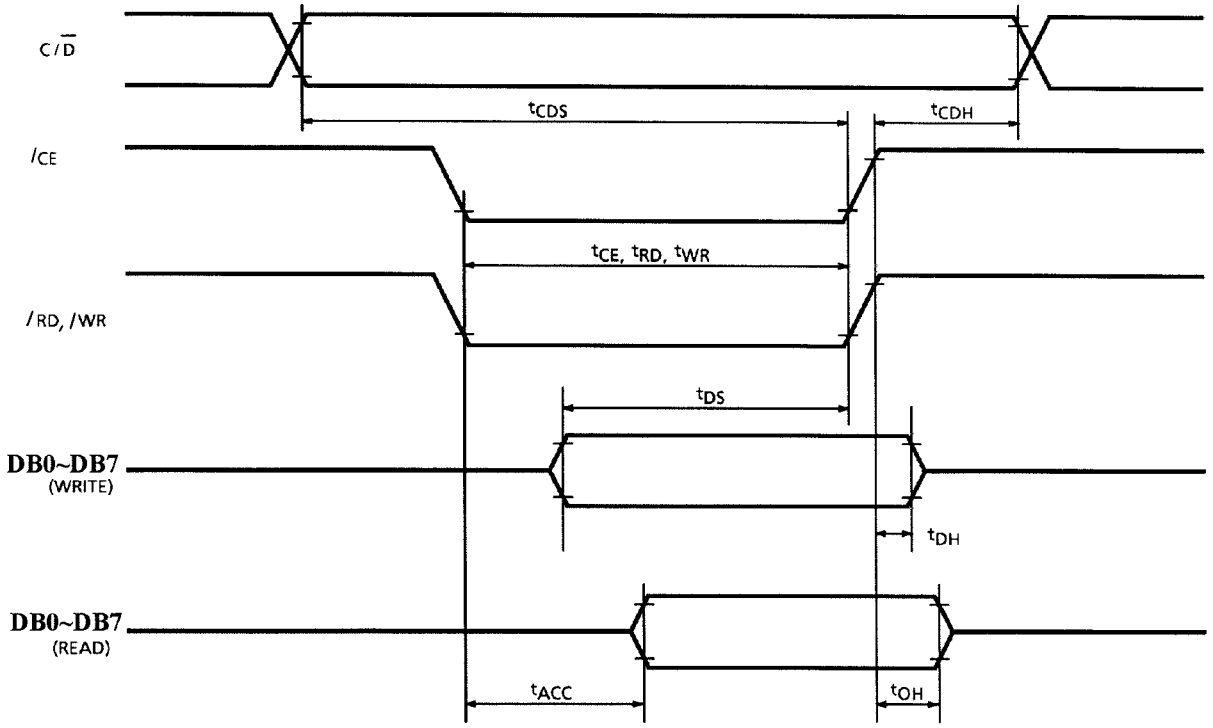

Figure2:BusTimingDiagram

4.4 TimingDiagramofVDD AgainstV0.

PoweronsequenceshallmeettherequirementofFigure3,thetimingdiagramofVDDagainstV0.

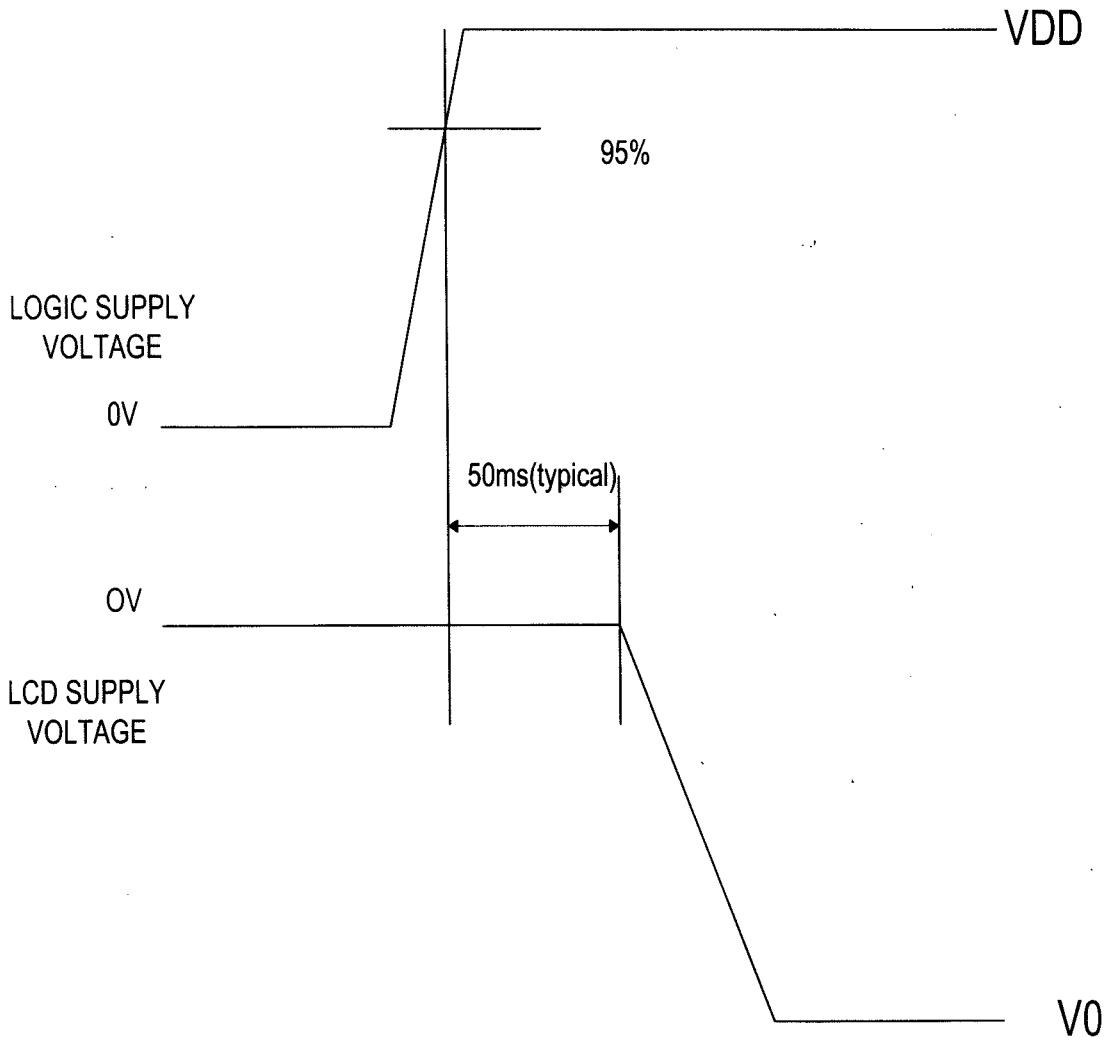

Figure3:TimingDiagramofVDDAgainstV0.

"VaritronixLimitedreservestherighttochangethisspecification."

FAX:(852)2343-9555.

URL:http://www.varitronix.com

VL Electronics
a subsidiary of Varitronix International Group
3250 Wilshire Blvd, suite 1901 • Los Angeles • CA 90010-1502
Voice: (213) 738-8700 • Fax: (213) 738-5340 • E-mail: sales@vle.com
Varitronix

LED BACKLIGHT for MGLS-24064
LED3G-24064

ISSUE	AMENDMENT	DATE
1	ADDED TOLERANCE CHANGE DIMENSIONS	9/1/97
2	CHANGE DIMENSIONS	97/4/8
3	CHANGE DIMENSIONS	9712.9
4	CHANGE DIMENSIONS	98.3.12
5	CHANGE DIMENSIONS	98.4.16

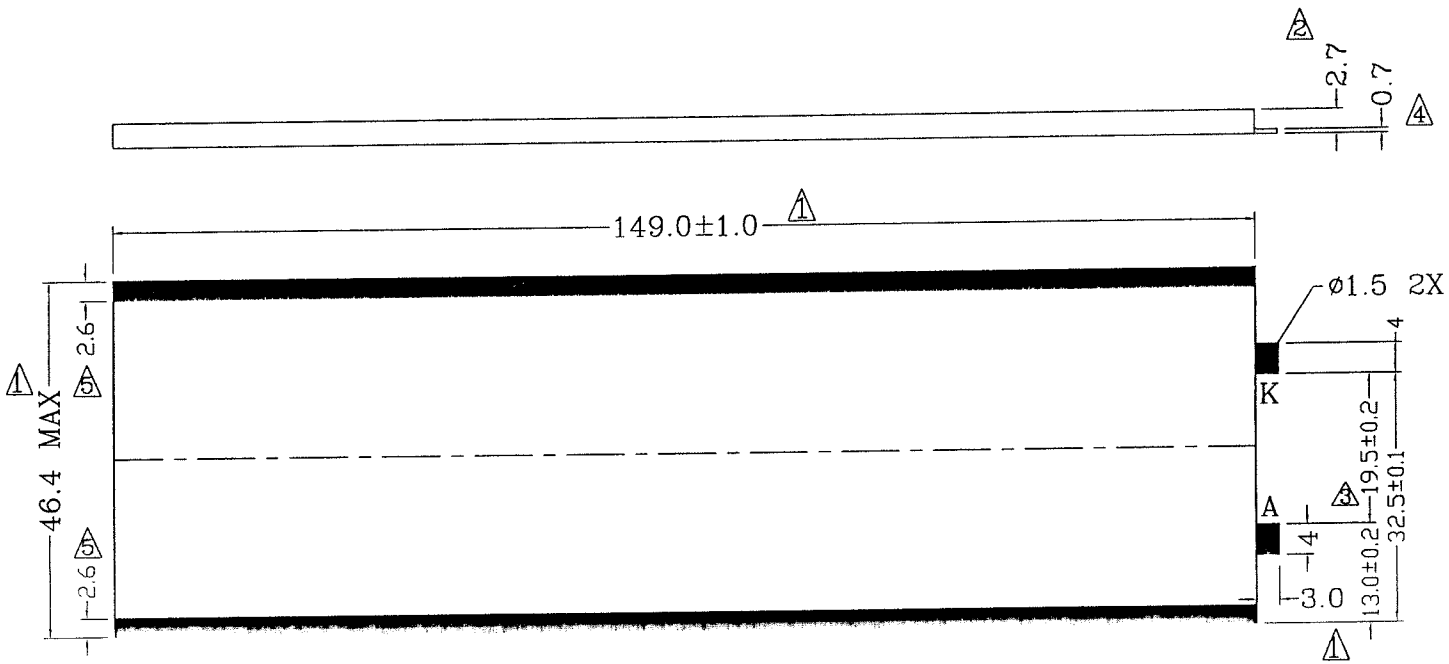

LED CIRCUIT

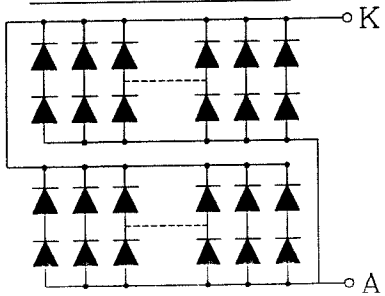

(2X22=44 CHIPS)

PARAMETER	TEST CONDITIONS	MIN	TYP	MAX	UNIT
FORWARD VOLTAGE	TEMPERATURE=+25°C FORWARD CURRENT=220mA	4.0	4.1	4.2	V

LED COLOR: YELLOW-GREEN

TITLE: BACKLIGHT
PROJECT NO: MGLS24064
TOLERANCE UNLESS OTHERWISE SPECIFIED: X.X ±0.3 X.XX ±0.1
DIMENSIONS IN MM
MATERIAL: FINISH:
SCALE: DO NOT ON SCALE THICKNESS:
THIRD ANGLE PROJECTION

	NAME	SIGE	DATE
DRAWN	CHAN KAM FAI		98.4.16
CHECKED	CHAN KAM FAI		
APPROVED	ANDY LEUNG		

ITEM NO. LBL-MGL24064-3G1P
DESCRIPTION: LBL-MGL24064LED03G(P)
FILE NO: WAI 3P24064 REV 5
SHEET 1 OF 1

VL Electronics
a subsidiary of Varitronix International Group
3250 Wilshire Blvd, suite 1901 • Los Angeles • CA 90010-1502
Voice: (213) 738-8700 • Fax: (213) 738-5340 • E-mail: sales@vle.com

VARITRONIX LIMITED

VARITRONIX LED BACKLIGHT (FOR GRAPHIC LCD)

LED3G-24064

LED3G-24064

LCD GLASS MECHANICAL DRAWING