Chipsmall Limited consists of a professional team with an average of over 10 year of expertise in the distribution of electronic components. Based in Hongkong, we have already established firm and mutual-benefit business relationships with customers from,Europe,America and south Asia,supplying obsolete and hard-to-find components to meet their specific needs.

With the principle of “Quality Parts,Customers Priority,Honest Operation,and Considerate Service”,our business mainly focus on the distribution of electronic components. Line cards we deal with include Microchip,ALPS,ROHM,Xilinx,Pulse,ON,Everlight and Freescale. Main products comprise IC,Modules,Potentiometer,IC Socket,Relay,Connector.Our parts cover such applications as commercial,industrial, and automotives areas.

We are looking forward to setting up business relationship with you and hope to provide you with the best service and solution. Let us make a better world for our industry!

Contact us

Tel: +86-755-8981 8866 Fax: +86-755-8427 6832
Email & Skype: info@chipsmall.com Web: www.chipsmall.com
Address: A1208, Overseas Decoration Building, #122 Zhenhua RD., Futian, Shenzhen, China

版数 REV.	年月日 DATE	DCN NO.	変更内容 DESCRIPTION	製図 DR.	担当 CHK.	査閲 APPD.	承認 APPD.
2	10.Feb.2006	059307	CORRECTION OF ERROR IN WRITTING	E.MURANO	Y.YAHIRO	—	K.Hizatomi

図面番号(DRAWING NO.) SJ100129

DESIGNATION

MM50-200B*-*E

- SERIES PREFIX / シリーズ名
- NO. OF CONTACTS / 芯数
- SOCKET TYPE / ソケットタイプ B:LATCH TYPE SMT
- KEYING TYPE(DETAIL A) / キィタイプ 2:TYPE B(1.8V) 1:TYPE A(2.5V)
- CONTACT FINISH / 接点仕上げ 1:Au(0.1μm MIN) OVER NI 2:Au(0.3μm MIN) OVER NI
- 錫または錫合金(無鉛) (LEAD FREE)TIN/TIN ALLOY

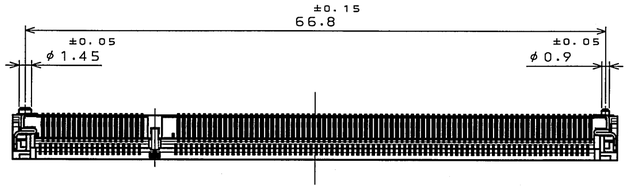

TABLE2

CONTACT FINISH

PARTS NAME	CONTACT AREA	SOLDERING AREA
MM50-200B*-1E	Au(0.1μm Min.) OVER NI	GOLD FLASH OVER NI
MM50-200B*-2E	Au(0.3μm Min.) OVER NI	GOLD FLASH OVER NI

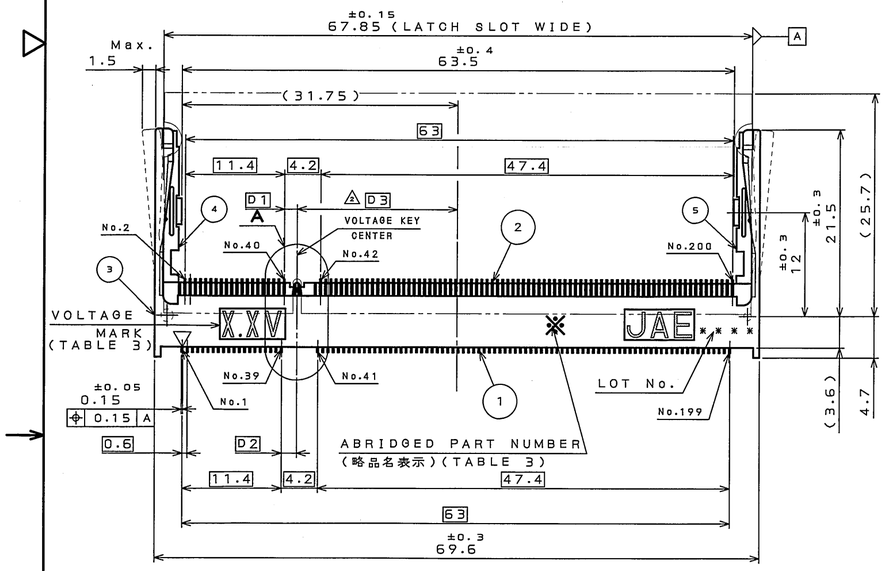

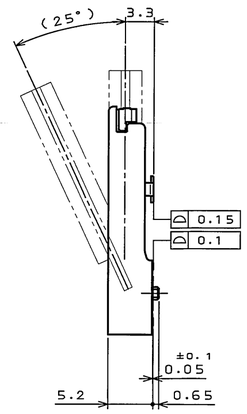

DETAIL A
(SCALE 5:1)
(REF.TABLE1)

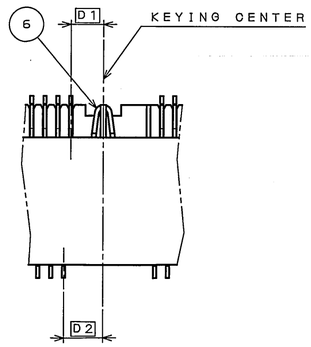

TABLE3

DISCRIMINATION MARK

PARTS NAME	VOLTAGE MARK	ABRIDGED PART NUMBER
MM50-200B1-*E	2.5V	*E
MM50-200B2-*E	1.8V	2-*E

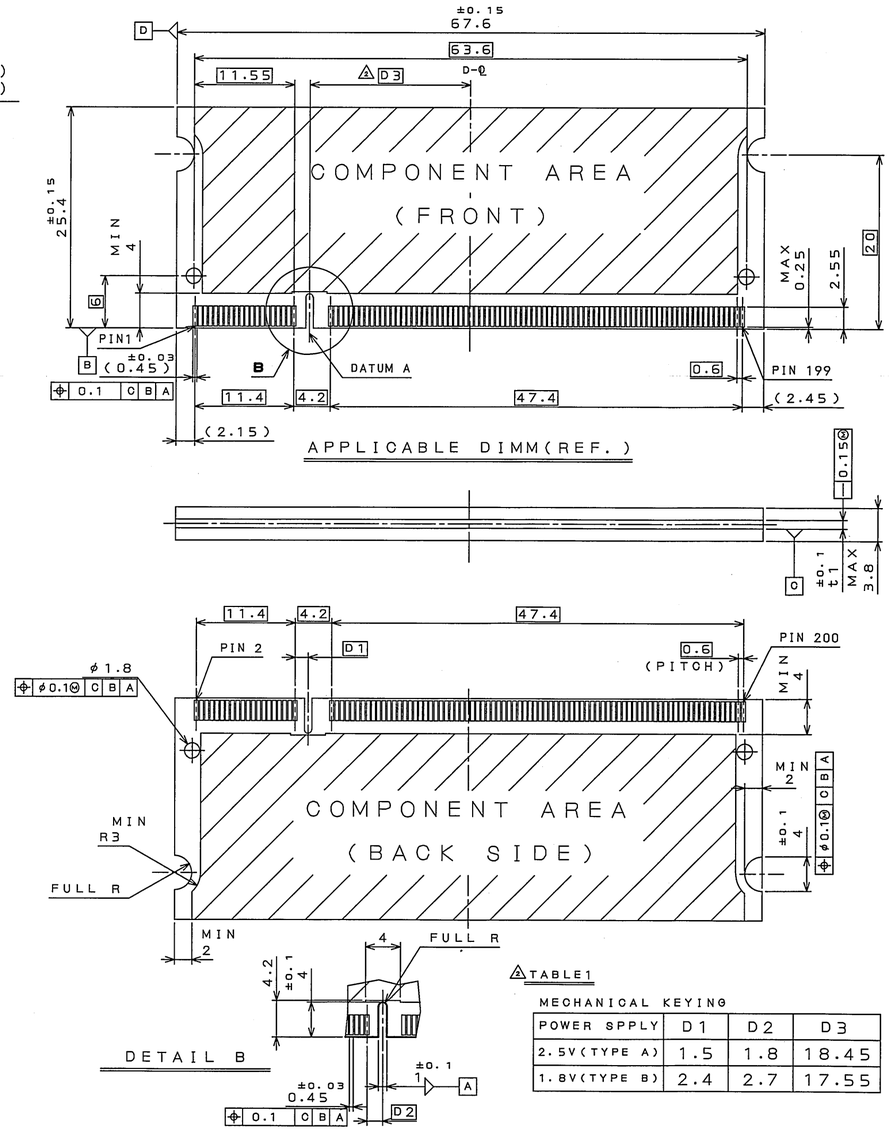

DETAIL B

TABLE1

MECHANICAL KEYING

POWER SPPLY	D1	D2	D3
2.5V(TYPE A)	1.5	1.8	18.45
1.8V(TYPE B)	2.4	2.7	17.55

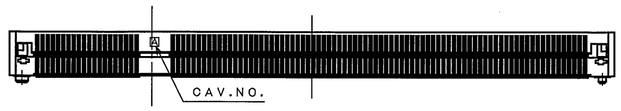

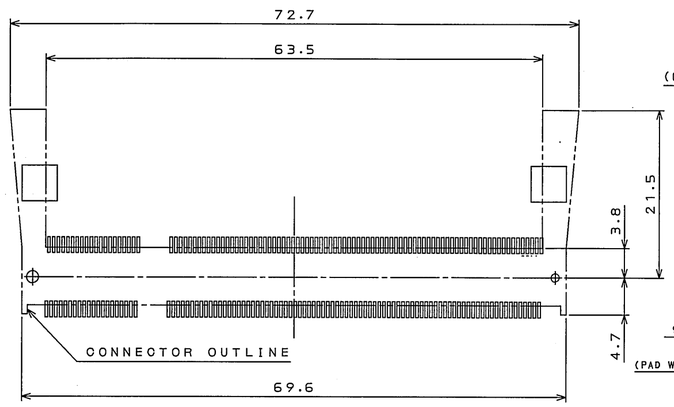

CONNECTOR MOUNTED AREA(REF.)

APPLICABLE P.C.B. DIMENSION(REF.)
適合基板寸法(参考)

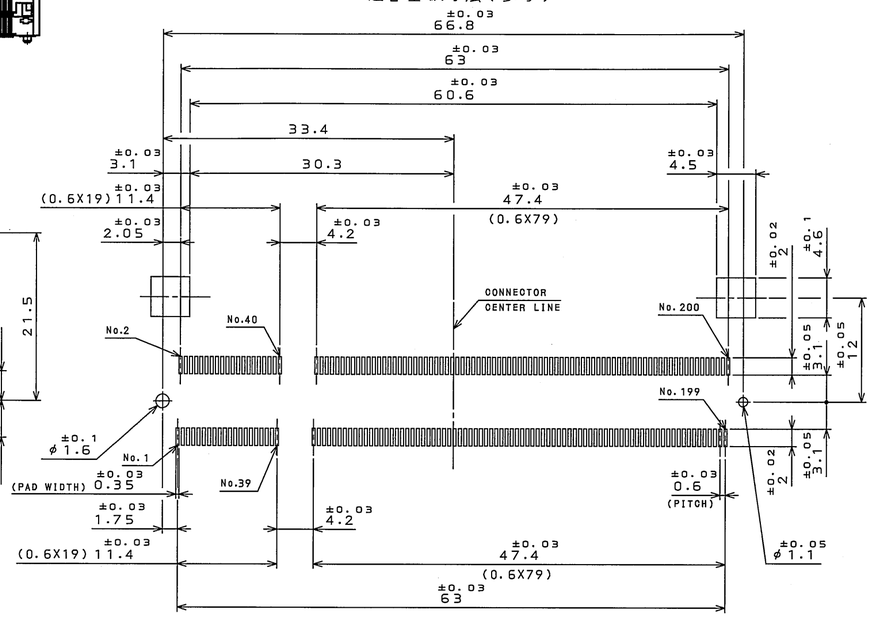

符号 NO.	名称 DESCRIPTION	個数 QTY.	材料 MATERIAL	仕上 FINISH	備考 REMARKS
6	KEY	1	STAINLESS	—	—
5	HOLD DOWN 2	1	PHOSPHOR BRONZE	TIN PLATING	—
4	HOLD DOWN 1	1	PHOSPHOR BRONZE	TIN PLATING	—
3	INSULATOR	1	GLASS FILLED LCP	—	UL94 V-0 COLOR WHITE
2	BOTTOM SIDE CONTACT	100	PHOSPHOR BRONZE	SEE TABLE 2	—
1	TOP SIDE CONTACT	100	PHOSPHOR BRONZE	SEE TABLE 2	—

仕様書(SPECIFICATION) JACS-1655-01

第1版(ORIGINAL DATE) 24.Oct.2003

製図 DR.

担当 CHK. R.KATOU

査閲 APPD. Y.YAHIRO

承認 APPD. S.KASHIWAGI

一般公差(GENERAL TOLERANCE)

寸法(DIMENSION)		角度(ANGLES)
.	±0.8	X° ±
.X	±0.4	X°X' ±
.XX	±0.1	
.XXX	±	

尺度(SCALE) 2:1

シリーズ(SERIES) MM50

名称(TITLE) MM50 -200B*-*E

質量(MASS)

日本航空電子工業株式会社 JAPAN AVIATION ELECTRONICS INDUSTRY, LTD.

図面番号(DRAWING NO.) SJ100129

版数(REV.) 2

SIZE A2

LEAD FREE この製品は鉛フリー品です

JAE-CONNECTOR.COM Reference Only

JAE CONNECTOR DIV. PROPRIETARY.
COPYRIGHT (C) 2003, JAPAN AVIATION ELECTRONICS INDUSTRY, LTD.

DOF-0-213F(05.08)