Chipsmall Limited consists of a professional team with an average of over 10 year of expertise in the distribution of electronic components. Based in Hongkong, we have already established firm and mutual-benefit business relationships with customers from,Europe,America and south Asia,supplying obsolete and hard-to-find components to meet their specific needs.

With the principle of “Quality Parts,Customers Priority,Honest Operation,and Considerate Service”,our business mainly focus on the distribution of electronic components. Line cards we deal with include Microchip,ALPS,ROHM,Xilinx,Pulse,ON,Everlight and Freescale. Main products comprise IC,Modules,Potentiometer,IC Socket,Relay,Connector.Our parts cover such applications as commercial,industrial, and automotives areas.

We are looking forward to setting up business relationship with you and hope to provide you with the best service and solution. Let us make a better world for our industry!

Contact us

Tel: +86-755-8981 8866 Fax: +86-755-8427 6832
Email & Skype: info@chipsmall.com Web: www.chipsmall.com
Address: A1208, Overseas Decoration Building, #122 Zhenhua RD., Futian, Shenzhen, China

図面番号(DRAWING NO.) SJ105215

版数 REV.	年月日 DATE	DCN NO.	変更内容 DESCRIPTION	製図 DR.	担当 CHK.	査閲 APPD.	承認 APPD.
2	23.Jan.2006	059045	CHANGED BOSS LENGTH	———	Y.YAHIRO	———	K.HISATOMI
3	30.Mar.2015	012843	CORRECT AN ERROR	———	S.YAMAGUCHI	M.SASAKI	T.SHINDOU

DESIGNATION

MM60-52B1-B*

- SERIES PREFIX
- No. OF CONTACTS
- SOCKET TYPE
- KEYING TYPE
- MODIFY CODE B:3.9mm HIGHT WITH BOSS
- CONTACT FINISH 1:Au(0.1μm Min.) OVER Ni 2:Au(0.3μm Min.) OVER Ni

NOTE 1. PRODUCTION LOT No. AS INDICATED.

(Ex.) T501
- LOT NUMBER OF CURRENT MONTH
- MONTH (1 TO 9 FOR JAN. TO SEPT. RESPECTIVELY. OCT.:O. NOV.:X. DEC.:Y)
- YEAR (LAST DIGIT ONLY)
- MANUFACTURE CODE

NOTE 2. CARD THICKNESS APPLIES ACROSS TABS AND INCLUDES PLATING AND/OR METALIZATION.

NOTE 3. BEVEL MUST BE FREE OF CUTTING BURRS.

NOTE 4. THE HORIZONTAL AXIS FOR THE PATTERN IS ESTABLISHED BY A LINE THROUGH THE CENTER OF THE φ1.6 AND φ1.1 HOLES.
THE VERTICAL AXIS IS 90° TO THE HORIZONTAL AXIS. THROUGH THE CENTER OF DATUM F.

NOTE 5. LOCATION OF INSERTED CARD EDGE IS ALIGNED WITH ℄ OF HOLES.

NOTE 6. ONLY WHEN THE LATCH SHOWN IN SJ105217(MM60-EZH039-B5) IS USED. THESE DIMENSIONS ARE APPLIED.

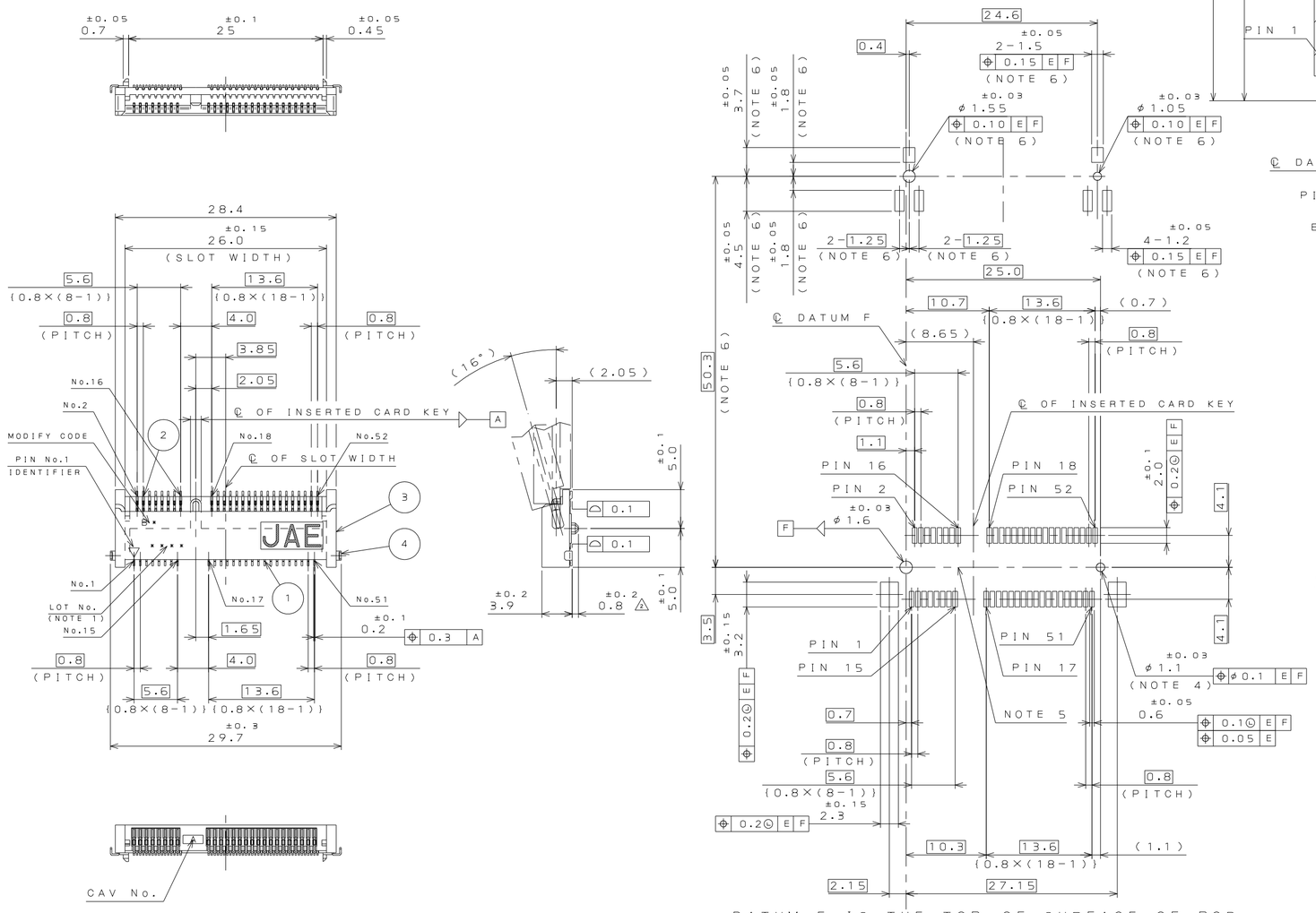

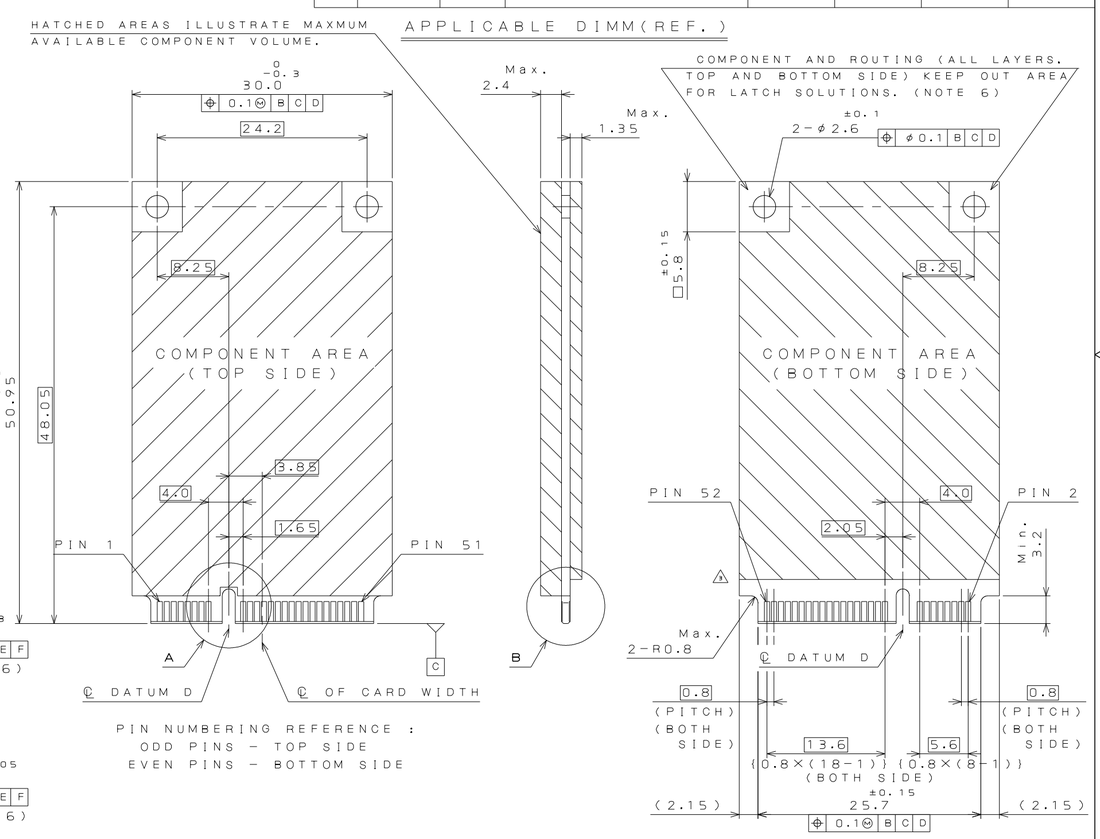

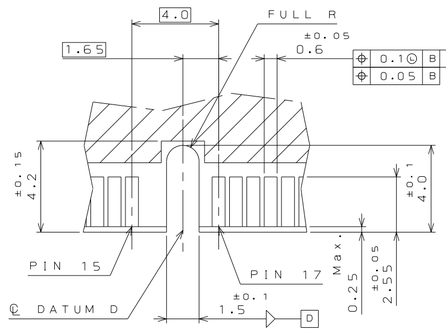

DETAIL A
(SCALE 5:1)

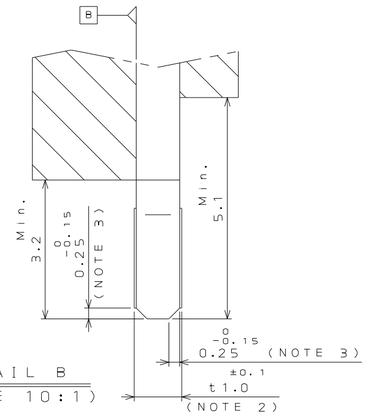

DETAIL B
(SCALE 10:1)

NO. 符号	DESCRIPTION 名称	QTY. 個数	MATERIAL 材料	FINISH 仕上	REMARKS 備考
4	HOLD DOWN	2	COPPER ALLOY	TIN PLATING	———
3	INSULATOR	1	THERMOPLASTIC	———	UL94 V-0
2	BOTTOM SIDE CONTACT	26	COPPER ALLOY	CONTACT AREA : Au OVER Ni SOLDERING AREA : GOLD FLASH OVER Ni	———
1	TOP SIDE CONTACT	26	COPPER ALLOY	CONTACT AREA : Au OVER Ni SOLDERING AREA : GOLD FLASH OVER Ni	———

仕様書(SPECIFICATION) JACS-10313	第1版(ORIGINAL DATE) 5.Dec.2005	尺度(SCALE) 2:1	シリーズ(SERIES) MM60
一般公差(GENERAL TOLERANCE) 寸法(DIMENSION) . ±0.8 .X ±0.4 .XX ±0.1 .XXX± 角度(ANGLES) X° ± X°X' ±	製図 DR. ———	名称(TITLE) MM60-52B*-B*	日本航空電子工業株式会社 JAPAN AVIATION ELECTRONICS INDUSTRY, LTD.
	担当 CHK. Y.YAHIRO		
	査閲 APPD. ———		
	承認 APPD. K.HISATOMI	質量(MASS)	図面番号(DRAWING NO.) SJ105215

SIZE A2 版数(REV.) 3

JAE-CONNECTOR.COM Reference Only

JAE CONNECTOR DIV. PROPRIETARY.
COPYRIGHT (C) 2005. JAPAN AVIATION ELECTRONICS INDUSTRY, LTD.

WISDOM承認 2015/04/01

DCF-C-213F(05.08)