Chipsmall Limited consists of a professional team with an average of over 10 year of expertise in the distribution of electronic components. Based in Hongkong, we have already established firm and mutual-benefit business relationships with customers from,Europe,America and south Asia,supplying obsolete and hard-to-find components to meet their specific needs.

With the principle of “Quality Parts,Customers Priority,Honest Operation,and Considerate Service”,our business mainly focus on the distribution of electronic components. Line cards we deal with include Microchip,ALPS,ROHM,Xilinx,Pulse,ON,Everlight and Freescale. Main products comprise IC,Modules,Potentiometer,IC Socket,Relay,Connector.Our parts cover such applications as commercial,industrial, and automotives areas.

We are looking forward to setting up business relationship with you and hope to provide you with the best service and solution. Let us make a better world for our industry!

Contact us

Tel: +86-755-8981 8866 Fax: +86-755-8427 6832
Email & Skype: info@chipsmall.com Web: www.chipsmall.com
Address: A1208, Overseas Decoration Building, #122 Zhenhua RD., Futian, Shenzhen, China

図面番号(DRAWING NO.) SJ110608

版数 REV.	年月日 DATE	DCN NO.	変更内容 DESCRIPTION	製図 DR.	担当 CHK.	査閲 APPD.	承認 APPD.
2	30.Mar.2015	012843	CORRECT AN ERROR		S.YAMAGUCHI	M.SASAKI	T.SHINDOU

WISDOM承認 2015/04/01

DESIGNATION

MM60-52B1-G1

- SERIES PREFIX
- No. OF CONTACTS
- SOCKET TYPE
- KEYING TYPE
- MODIFY CODE G:4.0mm HIGHT WITH BOSS
- CONTACT FINISH 1:Au(0.1μm Min.) OVER Ni

NOTE 1. PRODUCTION LOT No. AS INDICATED.

(Ex.) T501

- LOT NUMBER OF CURRENT MONTH
- MONTH (1 TO 9 FOR JAN. TO SEPT. RESPECTIVELY. OCT.:O. NOV.:X. DEC.:Y)
- YEAR (LAST DIGIT ONLY)
- MANUFACTURE CODE

NOTE 2. CARD THICKNESS APPLIES ACROSS TABS AND INCLUDES PLATING AND/OR METALIZATION.

NOTE 3. BEVEL MUST BE FREE OF CUTTING BURRS.

NOTE 4. THE HORIZONTAL AXIS FOR THE PATTERN IS ESTABLISHED BY A LINE THROUGH THE CENTER OF THE φ1.6 AND φ1.1 HOLES.
THE VERTICAL AXIS IS 90° TO THE HORIZONTAL AXIS. THROUGH THE CENTER OF DATUM F.

NOTE 5. LOCATION OF INSERTED CARD EDGE IS ALIGNED WITH ℄ OF HOLES.

NOTE 6. ONLY WHEN THE LATCH SHOWN IN SJ105217(MM60-EZH039-B5) IS USED. THESE DIMENSIONS ARE APPLIED.

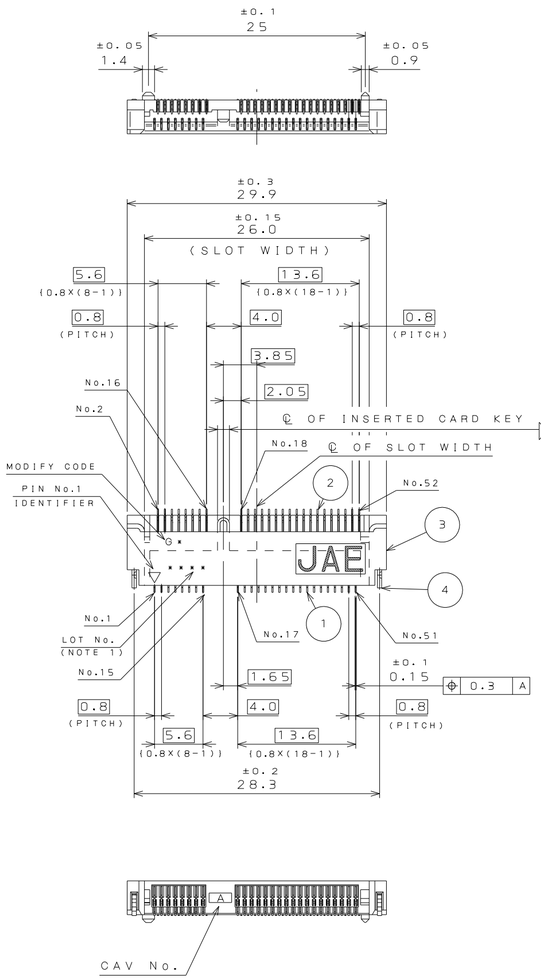

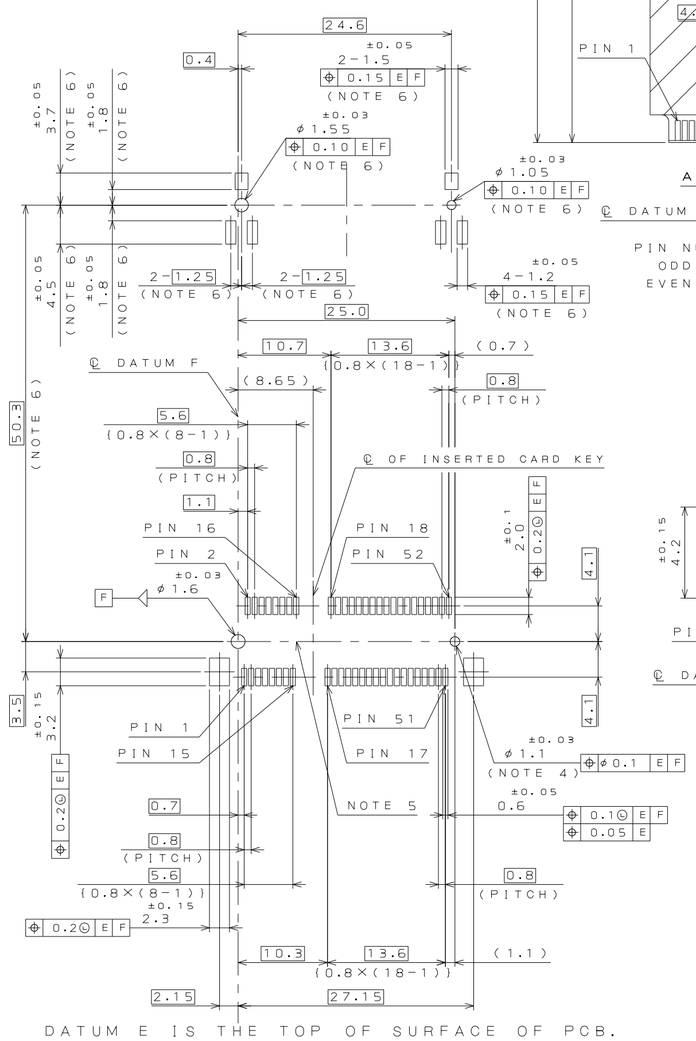

DATUM E IS THE TOP OF SURFACE OF PCB.

APPLICABLE P.C.B. DIMENSION(REF.)

適合基板寸法(参考)

HATCHED AREAS ILLUSTRATE MAXMUM AVAILABLE COMPONENT VOLUME.

APPLICABLE DIMM(REF.)

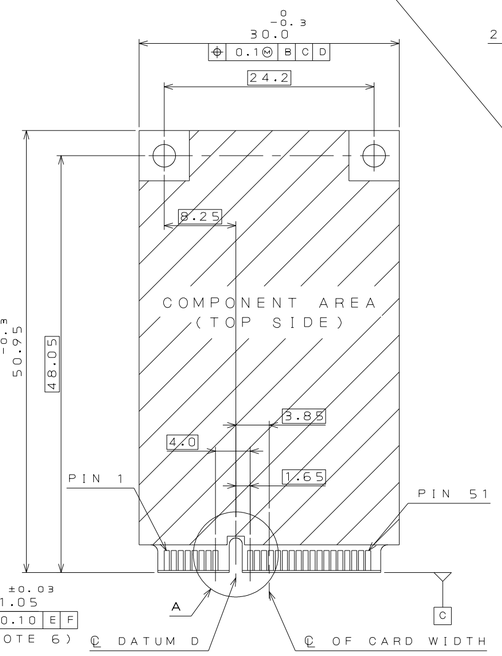

PIN NUMBERING REFERENCE :
ODD PINS - TOP SIDE
EVEN PINS - BOTTOM SIDE

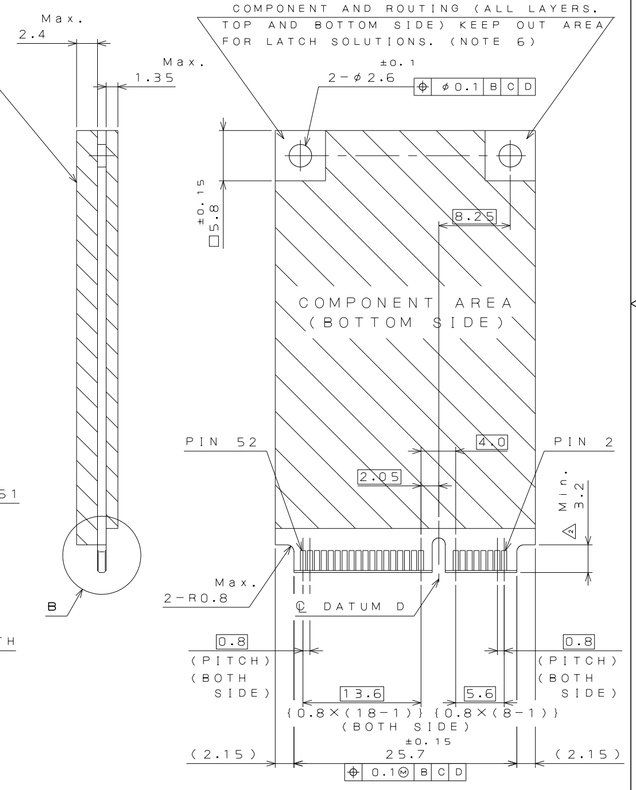

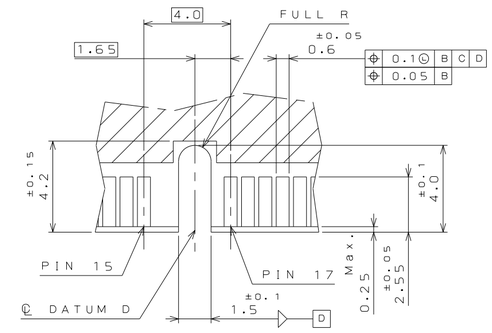

DETAIL A
(SCALE 5:1)

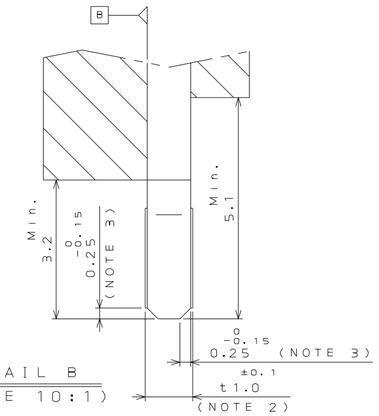

DETAIL B
(SCALE 10:1)

符号 NO.	名称 DESCRIPTION	個数 QTY.	材料 MATERIAL	仕上 FINISH	備考 REMARKS
4	HOLD DOWN	2	COPPER ALLOY	TIN PLATING	
3	INSULATOR	1	THERMOPLASTIC		UL94 V-0
2	BOTTOM SIDE CONTACT	26	COPPER ALLOY	CONTACT AREA :REFER TO「DESIGNATION」 SOLDERING AREA : GOLD FLASH OVER Ni	
1	TOP SIDE CONTACT	26	COPPER ALLOY	CONTACT AREA :REFER TO「DESIGNATION」 SOLDERING AREA : GOLD FLASH OVER Ni	

仕様書(SPECIFICATION) JACS-10706

第1版(ORIGINAL DATE) 21.Jul.2010

製図 DR.

担当 CHK. T.TSUJI

査閲 APPD.

承認 APPD. K.IBARAKI

一般公差(GENERAL TOLERANCE)

寸法(DIMENSION)	角度(ANGLES)
. ±0.8	×° ±
.× ±0.4	×°×′±
.×× ±0.1	
.××× ±	

尺度(SCALE) 2:1

シリーズ(SERIES) MM60

名称(TITLE) MM60-52B1-G1

質量(MASS)

日本航空電子工業株式会社
JAPAN AVIATION ELECTRONICS INDUSTRY, LTD.

図面番号(DRAWING NO.) SJ110608

版数(REV.) 2

SIZE A2

JAE-CONNECTOR.COM
Reference Only

JAE CONNECTOR DIV. PROPRIETARY.
COPYRIGHT (C) 2010. JAPAN AVIATION ELECTRONICS INDUSTRY, LTD.

DCF-C-213F(05.08)