Chipsmall Limited consists of a professional team with an average of over 10 year of expertise in the distribution of electronic components. Based in Hongkong, we have already established firm and mutual-benefit business relationships with customers from,Europe,America and south Asia,supplying obsolete and hard-to-find components to meet their specific needs.

With the principle of “Quality Parts,Customers Priority,Honest Operation,and Considerate Service”,our business mainly focus on the distribution of electronic components. Line cards we deal with include Microchip,ALPS,ROHM,Xilinx,Pulse,ON,Everlight and Freescale. Main products comprise IC,Modules,Potentiometer,IC Socket,Relay,Connector.Our parts cover such applications as commercial,industrial, and automotives areas.

We are looking forward to setting up business relationship with you and hope to provide you with the best service and solution. Let us make a better world for our industry!

Contact us

Tel: +86-755-8981 8866 Fax: +86-755-8427 6832
Email & Skype: info@chipsmall.com Web: www.chipsmall.com
Address: A1208, Overseas Decoration Building, #122 Zhenhua RD., Futian, Shenzhen, China

版数 REV.	年月日 DATE	DCN NO.	変更内容 DESCRIPTION	製図 DR.	担当 CHK.	査閲 APPD.	承認 APPD.
2	5.Oct.2011	000497	CORRECTED OUTSIDE	——	H.KOIZUMI	R.KATOU	T.SHINDOU

図番号(DRAWING NO.) SJ109265

WISDOM承認 2011/11/21

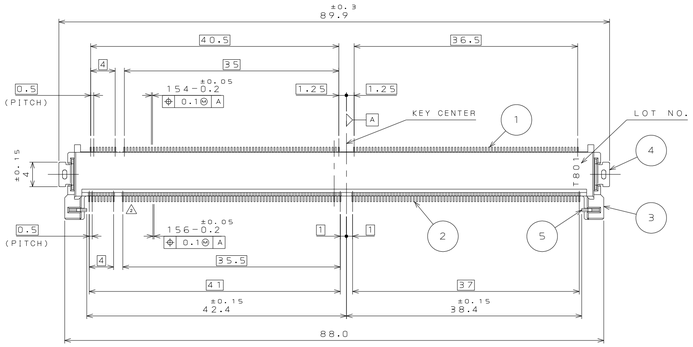

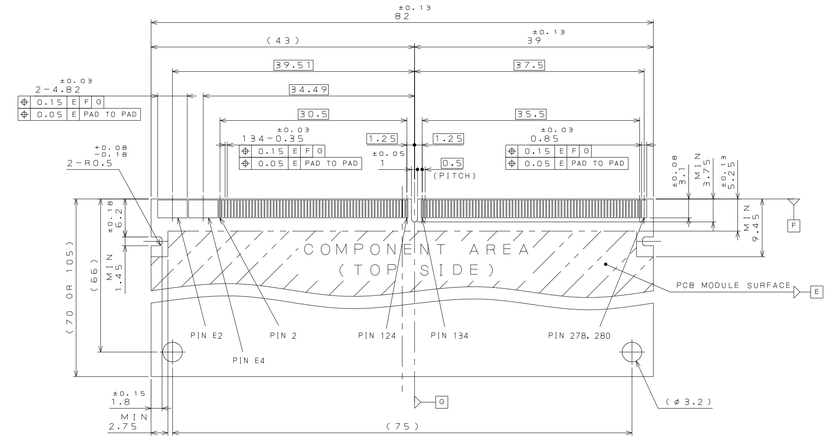

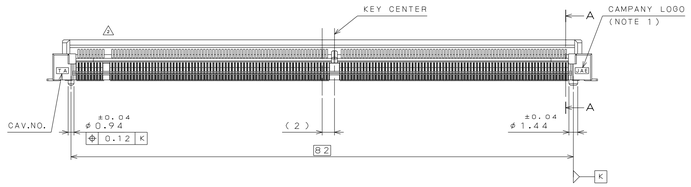

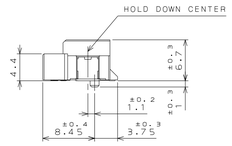

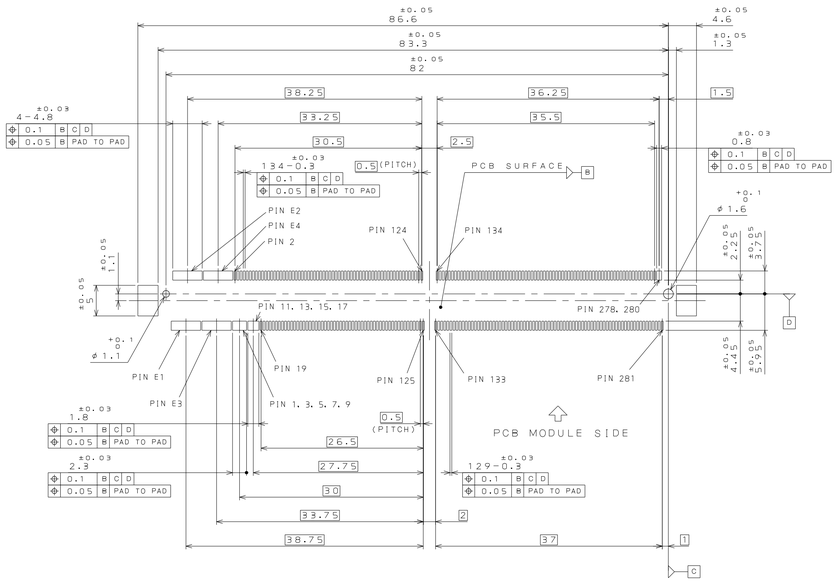

APPLICABLE P.C.B. DIMENSION(REF.)
適合基板寸法(参考)

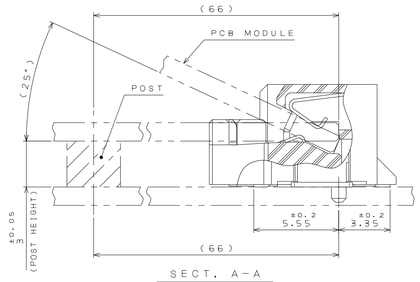

SECT. A-A
(SCALE 5:1)

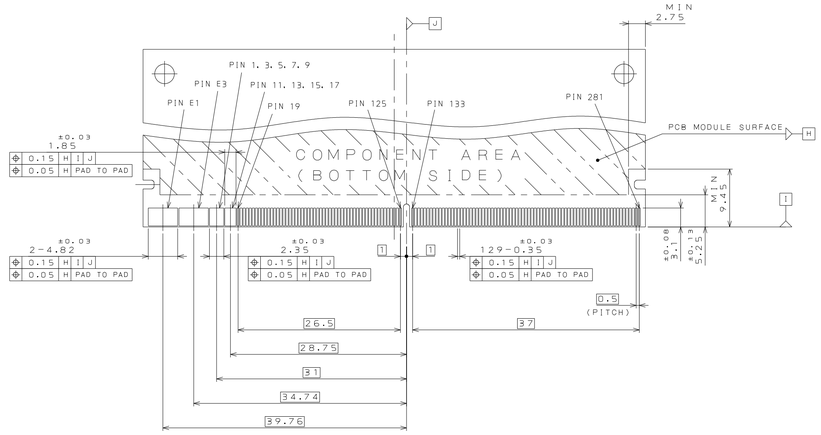

APPLICABLE P.C.B. MODULE DIMENSION(REF.)
適合モジュール基板寸法(参考)

MXM3.0(Rev1.0)

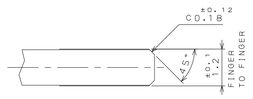

DETAIL B
(SCALE10:1)

NOTE1. PRODUCTION LOT NUMBER AS INDICATED.
2. COPLANALITY OF SMT TERMINAL IS 0.1 MAX.

注1.コンタクトのコプラナリティは0.1以下とする。
2.図示の面にロット番号を表示する。

(EX.) T801
- LOT NUMBER OF CURRENT MONTH 当月の生産ロットを示す
- MONTH(RESPECTIVELY. OCT.:O. NOV.:X. DEC.:Y) 月表示(10月:O.11月:X.12月:Y)
- YEAR(LAST DIGIT ONLY) 年表示 (西暦末尾)
- PRODUCT CODE 製造コード

DESIGNATION
命名法

MM70-314-310B1-*
- SERIES PREFIX シリーズ名
- BASIC NUMBER OF CONTACTS 基本芯数
- NUMBER OF CONTACTS USED 使用コンタクト数
- CONTACT FINISH 接点仕上げ
  - 1:GOLD(0.1μm MIN) OVER NICKEL
  - 2:GOLD(0.3μm MIN) OVER NICKEL
- MODIFICATION CODE
- SOCKET TYPE ソケットタイプ
  - B:ANGLED INSERTION TYPE

NO.	DESCRIPTION	QTY.	MATERIAL	FINISH	REMARKS
5	STOPPER	2	COPPER ALLOY	TIN OVER NICKEL	——
4	HOLD DOWN	2	COPPER ALLOY	TIN OVER NICKEL	——
3	INSULATOR	1	GLASS FILLED LCP	——	UL94 V-0 COLOR:BLACK
2	BOTTOM SIDE CONTACT	156	COPPER ALLOY	CONTACT AREA: REFER TO "DESIGNATION" SOLDERING AREA: GOLD FLASH OVER NICKEL	——
1	TOP SIDE CONTACT	154	COPPER ALLOY		——

仕様書(SPECIFICATION) JACS-10543-*
第1版(ORIGINAL DATE) 31.Oct.2008
尺度(SCALE) 2:1
シリーズ(SERIES) MM70
名称(TITLE) MM70-314-310B1-*
日本航空電子工業株式会社 JAPAN AVIATION ELECTRONICS INDUSTRY, LTD.
一般公差(GENERAL TOLERANCE)
寸法(DIMENSION): . ±0.8 / .X ±0.4 / .XX ±0.1 / .XXX ±
角度(ANGLES): X° ± / X°X'±
製図 DR.
担当 CHK. M.KIMURA
査閲 APPD.
承認 APPD. M.WATANABE
質量(MASS)
図面番号(DRAWING NO.) SJ109265
版数(REV.) 2
SIZE

JAE-CONNECTOR.COM
Reference Only

JAE CONNECTOR DIV. PROPRIETARY.
COPYRIGHT (C) 2008. JAPAN AVIATION ELECTRONICS INDUSTRY. LTD.

DCF-C-214F(05.08)