Chipsmall Limited consists of a professional team with an average of over 10 year of expertise in the distribution of electronic components. Based in Hongkong, we have already established firm and mutual-benefit business relationships with customers from,Europe,America and south Asia,supplying obsolete and hard-to-find components to meet their specific needs.

With the principle of “Quality Parts,Customers Priority,Honest Operation,and Considerate Service”,our business mainly focus on the distribution of electronic components. Line cards we deal with include Microchip,ALPS,ROHM,Xilinx,Pulse,ON,Everlight and Freescale. Main products comprise IC,Modules,Potentiometer,IC Socket,Relay,Connector.Our parts cover such applications as commercial,industrial, and automotives areas.

We are looking forward to setting up business relationship with you and hope to provide you with the best service and solution. Let us make a better world for our industry!

Contact us

Tel: +86-755-8981 8866 Fax: +86-755-8427 6832
Email & Skype: info@chipsmall.com Web: www.chipsmall.com
Address: A1208, Overseas Decoration Building, #122 Zhenhua RD., Futian, Shenzhen, China

版数 REV.	年月日 DATE	DCN NO.	変更内容 DESCRIPTION	製図 DR.	担当 CHK.	査閲 APPD.	承認 APPD.

図面番号(DRAWING NO.) SJ109148

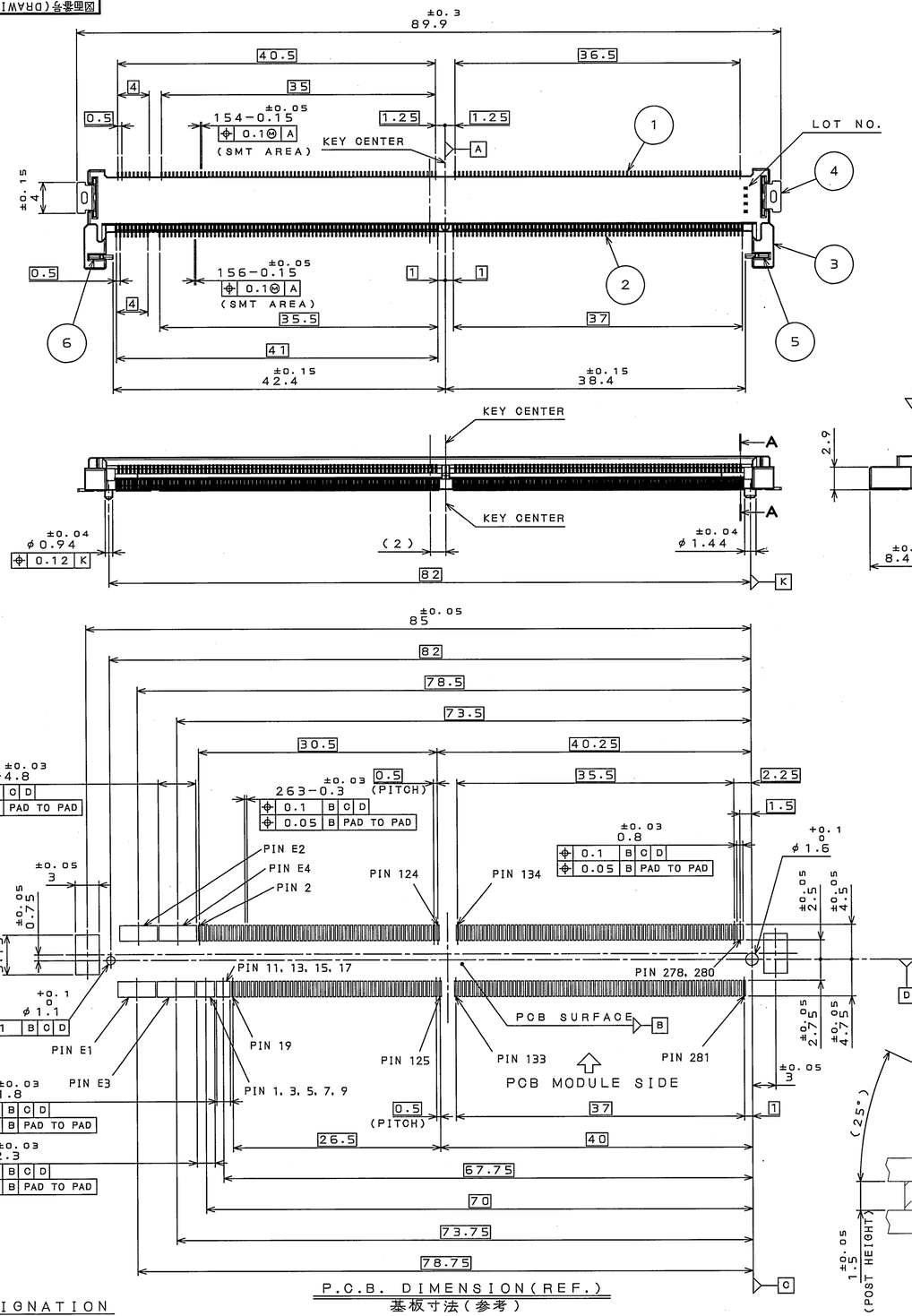

P.C.B. DIMENSION(REF.)
基板寸法(参考)

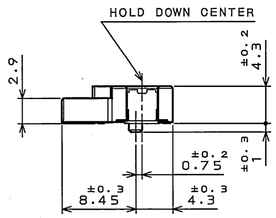

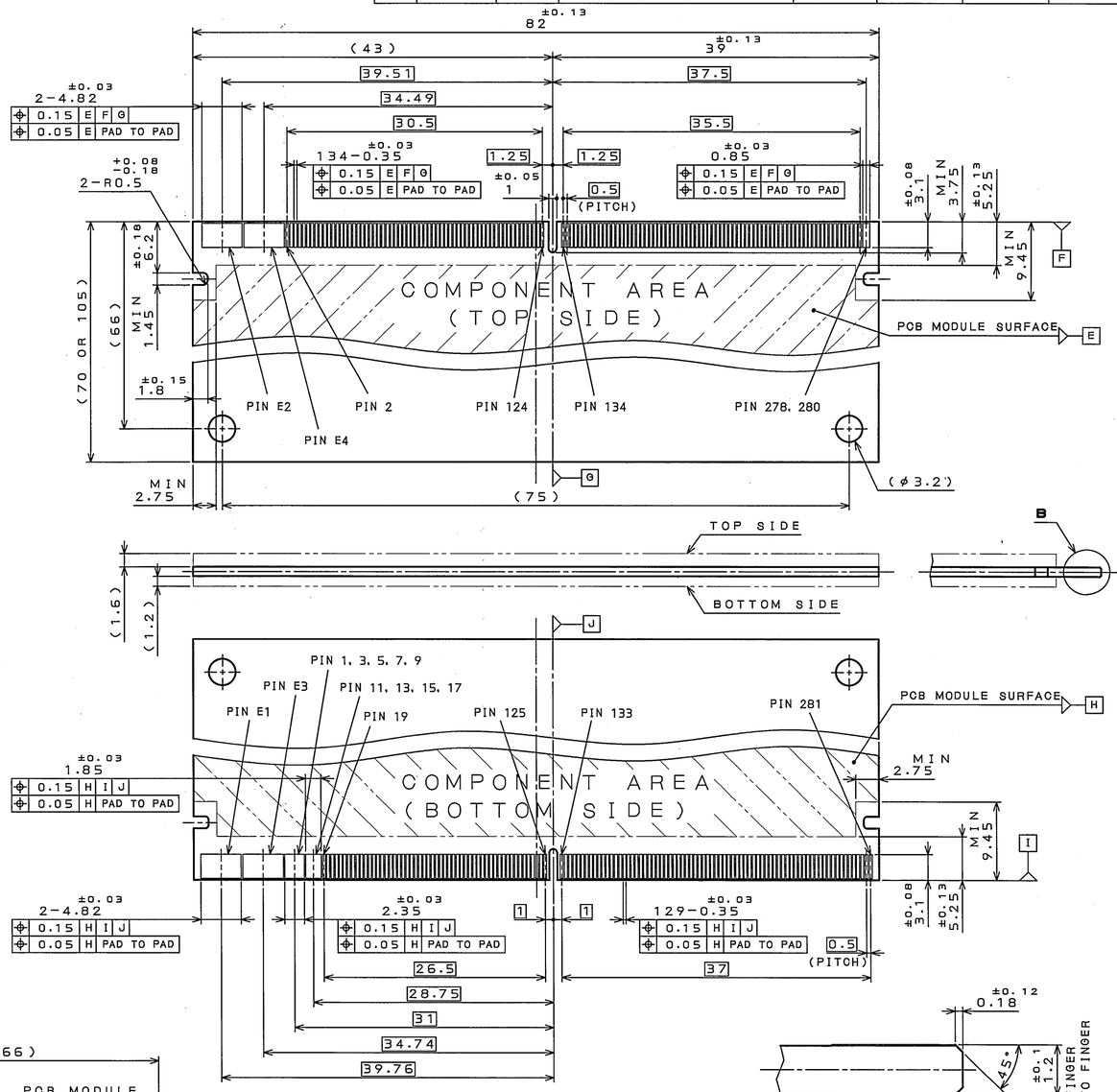

P.C.B. MODULE DIMENSION(REF.)
モジュール基板寸法(参考)

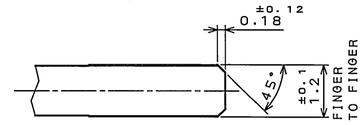

DETAIL B
(SCALE10:1)

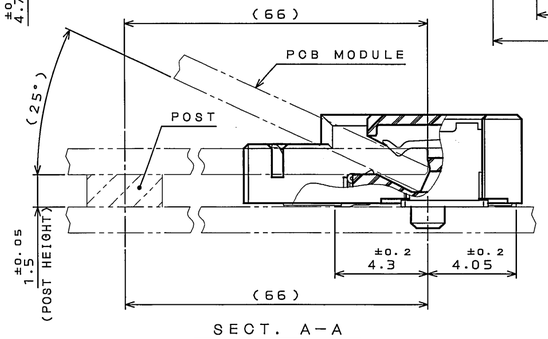

SECT. A−A
(SCALE 5:1)

NO. 符号	DESCRIPTION 名称	QTY. 個数	MATERIAL 材料	FINISH 仕上	REMARKS 備考
6	STOPPER(L)	1	COPPER ALLOY	TIN OVER NICKEL	——
5	STOPPER(R)	1	COPPER ALLOY	TIN OVER NICKEL	——
4	HOLD DOWN	2	COPPER ALLOY	TIN OVER NICKEL	——
3	INSULATOR	1	GLASS FILLED LCP	——	UL94 V-0 COLOR:BLACK
2	BOTTOM SIDE CONTACT	156	COPPER ALLOY	CONTACT AREA: REFER TO "DESIGNATION" SOLDERING AREA: GOLD FLASH OVER NICKEL	——
1	TOP SIDE CONTACT	154	COPPER ALLOY		——

DESIGNATION
命名法

MM70−314−310B2−＊

- SERIES PREFIX / シリーズ名: MM70
- BASIC NUMBER OF CONTACTS / 基本芯数: 314
- NUMBER OF CONTACTS USED / 使用コンタクト数: 310
- SOCKET TYPE / ソケットタイプ: B:ANGLED INSERTION TYPE
- MODIFICATION CODE
- CONTACT FINISH / 接点仕上げ: 1:GOLD(0.1μm MIN) OVER NICKEL; 2:GOLD(0.3μm MIN) OVER NICKEL

NOTE1.COPLANALITY OF SMT TERMINAL IS 0.1 MAX.
注1.コンタクトのコプラナリティは0.1以下とする。

仕様書(SPECIFICATION)	JACS-10543-2
第1版(ORIGINAL DATE)	19.Sep.2008
製図 DR.	——
担当 CHK.	M.MATSUMOTO
査閲 APPD.	——
承認 APPD.	Y.YAHIRO
尺度(SCALE)	2:1
シリーズ(SERIES)	MM70
名称(TITLE)	MM70-314-310B2-＊
質量(MASS)	
図面番号(DRAWING NO.)	SJ109148
版数(REV.)	1
SIZE	A2

一般公差(GENERAL TOLERANCE)

寸法(DIMENSION)	角度(ANGLES)
. ±0.8	X° ± ——
.X ±0.4	X°X' ± ——
.XX ±0.1	
.XXX ± ——	

日本航空電子工業株式会社
JAPAN AVIATION ELECTRONICS INDUSTRY, LTD.

JAE-CONNECTOR.COM
Reference Only

JAE CONNECTOR DIV. PROPRIETARY.
COPYRIGHT (C) 2008, JAPAN AVIATION ELECTRONICS INDUSTRY, LTD.

DOF-0-213F(05.08)