Chipsmall Limited consists of a professional team with an average of over 10 year of expertise in the distribution of electronic components. Based in Hongkong, we have already established firm and mutual-benefit business relationships with customers from,Europe,America and south Asia,supplying obsolete and hard-to-find components to meet their specific needs.

With the principle of “Quality Parts,Customers Priority,Honest Operation,and Considerate Service”,our business mainly focus on the distribution of electronic components. Line cards we deal with include Microchip,ALPS,ROHM,Xilinx,Pulse,ON,Everlight and Freescale. Main products comprise IC,Modules,Potentiometer,IC Socket,Relay,Connector.Our parts cover such applications as commercial,industrial, and automotives areas.

We are looking forward to setting up business relationship with you and hope to provide you with the best service and solution. Let us make a better world for our industry!

Contact us

Tel: +86-755-8981 8866 Fax: +86-755-8427 6832
Email & Skype: info@chipsmall.com Web: www.chipsmall.com
Address: A1208, Overseas Decoration Building, #122 Zhenhua RD., Futian, Shenzhen, China

版数 REV.	年月日 DATE	DCN NO.	変更内容 DESCRIPTION	製図 DR.	担当 CHK.	査閲 APPD.	承認 APPD.
2	10.Feb.2011	071605	LATCH SHAPE CHANGE AND GEOMETRY ALLOWANCE ADD	——	R.KATOU	——	T.Shindo

図面番号(DRAWING NO.) SJ110255

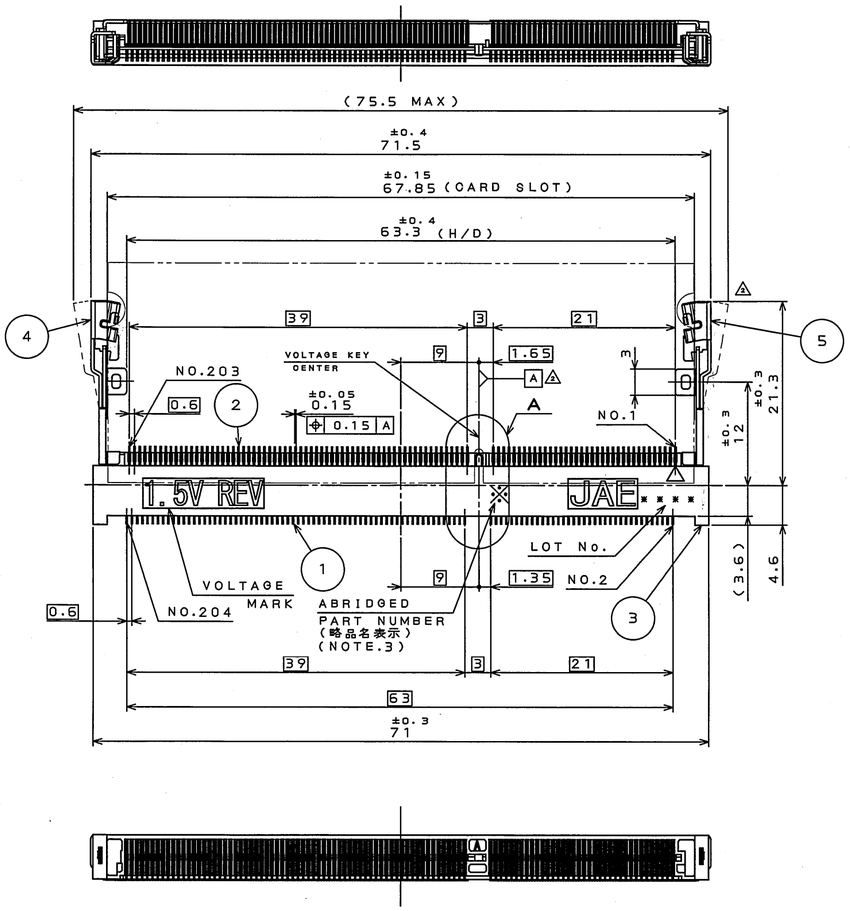

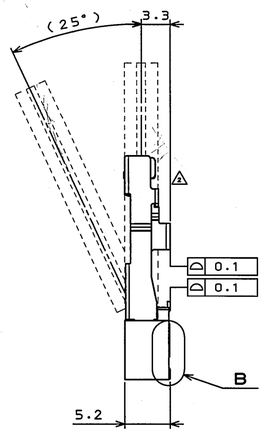

DETAIL A
(SCALE 5:1)

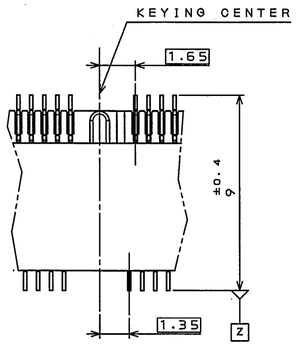

DETAIL B
(SCALE 10:1)

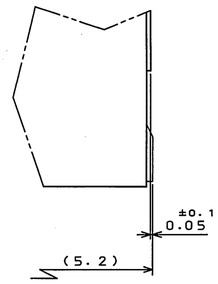

APPLICABLE DIMM(REF.)

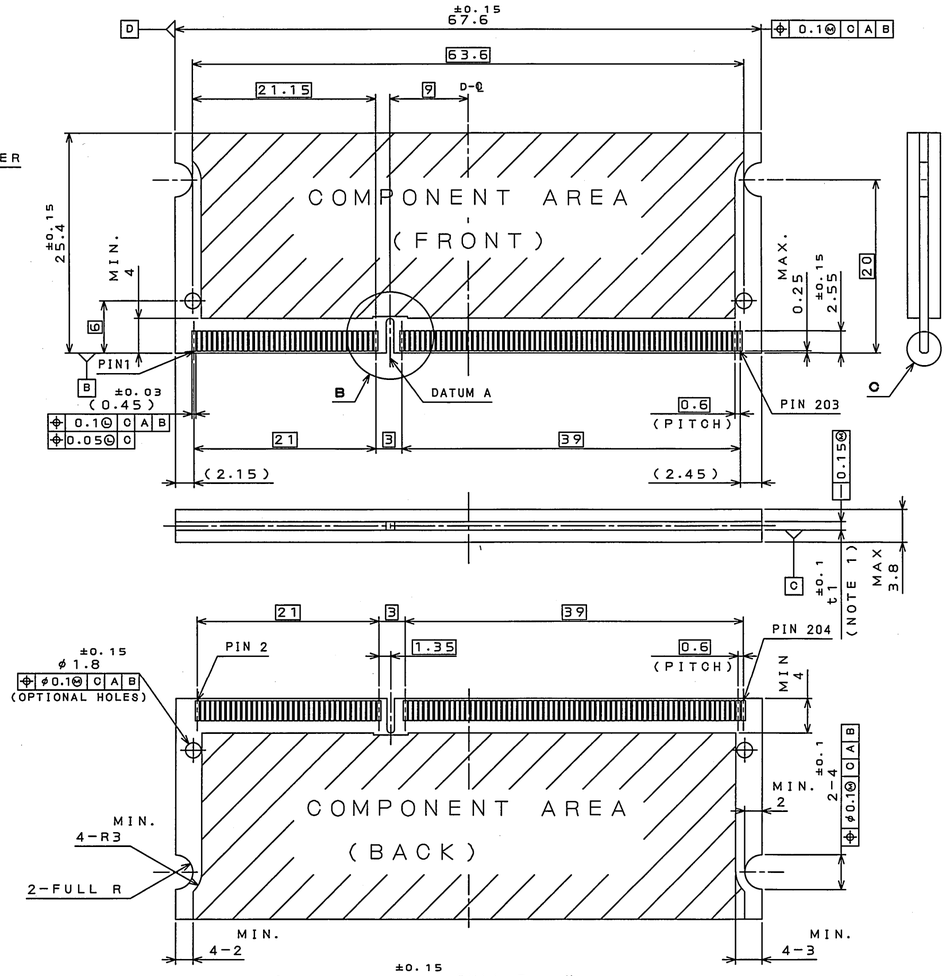

DESIGNATION

MM80-204B1-1R

- SERIES シリーズ: MM80
- NO. OF CONTACTS 芯数: 204
- SOCKET TYPE ソケットタイプ: B:LATCH TYPE SMT
- KEYING TYPE キィタイプ: 1:1.5V
- CONTACT FINISH 接点仕上げ: 1:Au(0.1μm MIN) OVER NI
- R : REVERSE
- NONE : STANDARD

NOTE 1. CARD THICKNESS INCLUDES PAD PLATING.
NOTE 2. BEVEL MUST BE FREE OF CUTTING BURRS.
NOTE 3. ABRIDGED PART NUMBER IS DISPLAYED AS BELOW
MM80-204B1-1R
ABRIDGED PART NUMBER

注1.カート゛の厚みは、接点部パッドのめっきを含んだ厚みを適用します。
注2.先端面取り部は、バリなど無き事。
注3.略品名表示は下記下線部分を表示します。
MM80-204B1-1R
略品名

APPLICABLE P.C.B. DIMENSION(REF.)
適合基板寸法(参考)

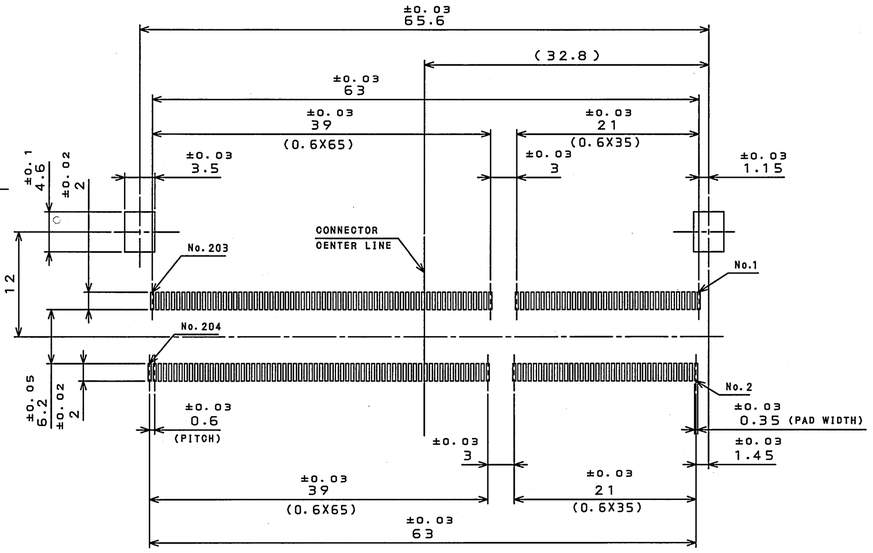

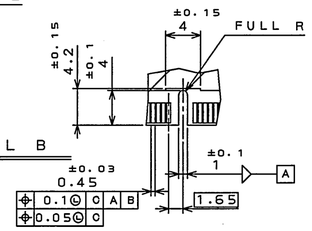

DETAIL B

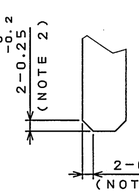

DETAIL C

NO.	符号 DESCRIPTION	個数 QTY.	材料 MATERIAL	仕上 FINISH	備考 REMARKS
5	LATCH 2	1	STAINLESS	TIN PLATING	——
4	LATCH 1	1	STAINLESS	TIN PLATING	——
3	INSULATOR	1	GLASS FILLED LCP	——	——
2	LOWER CONTACT	102	COPPER ALLOY	CONTACT AREA:Au(0.1μm MIN) OVER NICKEL SOLDERING AREA:GOLD FLASH OVER NICKEL	——
1	UPPER CONTACT	102	COPPER ALLOY	CONTACT AREA:Au(0.1μm MIN) OVER NICKEL SOLDERING AREA:GOLD FLASH OVER NICKEL	——

仕様書(SPECIFICATION) JACS-10662
第1版(ORIGINAL DATE) 24.Aug.2010
尺度(SCALE) 2:1
シリーズ(SERIES) MM80
名称(TITLE) MM80-204B1-1R
製図 DR. ——
担当 CHK. R.KATOU
査閲 APPD. ——
承認 APPD. T.SHINDOU
質量(MASS)
一般公差(GENERAL TOLERANCE)
寸法(DIMENSION): .±0.8 / .X ±0.4 / .XX ±0.1 / .XXX±
角度(ANGLES): X° ± / X°X'±

日本航空電子工業株式会社
JAPAN AVIATION ELECTRONICS INDUSTRY, LTD.
図面番号(DRAWING NO.) SJ110255
版数(REV.) 2
SIZE A2

JAE - CONNECTOR.COM
Reference Only

JAE CONNECTOR DIV. PROPRIETARY.
COPYRIGHT (C) 2010, JAPAN AVIATION ELECTRONICS INDUSTRY, LTD.

DOF-0-213F(05.08)