Chipsmall Limited consists of a professional team with an average of over 10 year of expertise in the distribution of electronic components. Based in Hongkong, we have already established firm and mutual-benefit business relationships with customers from,Europe,America and south Asia,supplying obsolete and hard-to-find components to meet their specific needs.

With the principle of “Quality Parts,Customers Priority,Honest Operation,and Considerate Service”,our business mainly focus on the distribution of electronic components. Line cards we deal with include Microchip,ALPS,ROHM,Xilinx,Pulse,ON,Everlight and Freescale. Main products comprise IC,Modules,Potentiometer,IC Socket,Relay,Connector.Our parts cover such applications as commercial,industrial, and automotives areas.

We are looking forward to setting up business relationship with you and hope to provide you with the best service and solution. Let us make a better world for our industry!

Contact us

Tel: +86-755-8981 8866 Fax: +86-755-8427 6832
Email & Skype: info@chipsmall.com Web: www.chipsmall.com
Address: A1208, Overseas Decoration Building, #122 Zhenhua RD., Futian, Shenzhen, China

THIS COPY IS PROVIDED ON A RESTRICTED BASIS AND IS NOT TO BE USED IN ANY WAY DETRIMENTAL TO THE INTERESTS OF PANDUIT CORP.

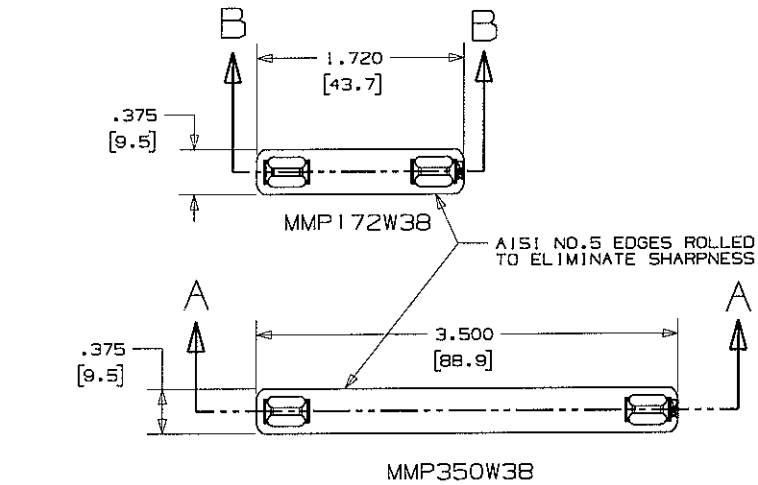

PART NUMBER	MATERIAL	PACKAGING QTY.
MMP350W38-C	304 SS	100
MMP350W38-C316	316 SS	100
MMP172W38-C	304 SS	100
MMP172W38-C316	316 SS	100
MMP350W38-M	304 SS	1000
MMP350W38-M316	316 SS	1000

SECTION A-A
SCALE 1:1

SECTION B-B
SCALE 1:1

NOTES:

1. DIMENSIONS IN ( ) ARE mm.
2. CUSTOM PERMANENT MARKING AVAILABLE. CONSULT FACTORY.
3. USE WITH STD. CROSS SECTION MLT'S.
4. TOLERANCE (UNLESS OTHERWISE SPECIFIED):
   .XXX = ±.020(.5)
   .XX = ±.03(.8)

REV	DATE	BY	CHK	DESCRIPTION
01B	8/08	JAMB	SKB	ADDED PART NO'S TO PART TABLE FOR BULK QTY 1000 MARKER PLATES
01A	3/08	JMMR	SKB	GENERAL REVISION
00A	9/07	JMMR	SKB	RELEASED

CAD FILENAME/LAYERS: N10843BA_DC/01B

PANDUIT CORP TINLEY PARK, ILLINOIS

3/8 WIDE MARKER PLATES
CUSTOMER DRAWING

UNLESS OTHERWISE SPECIFIED, DIMENSIONAL TOLERANCES ARE: (.XX) ±N/A (.XXX) ±N/A (.XXXX) ± N/A ANGLES ± N/A

UNLESS OTHERWISE SPECIFIED, ALL DIMENSIONS ARE GIVEN IN INCHES, THIRD ANGLE PROJECTION

DRAWN BY: JMMR
DATE: 9/28/07
CHK'D: SKB
MAT'L: N/A
SCALE: FULL
DRAWING NO.: N10843BA_DC
DWG SIZE: B