Chipsmall Limited consists of a professional team with an average of over 10 year of expertise in the distribution of electronic components. Based in Hongkong, we have already established firm and mutual-benefit business relationships with customers from,Europe,America and south Asia,supplying obsolete and hard-to-find components to meet their specific needs.

With the principle of “Quality Parts,Customers Priority,Honest Operation,and Considerate Service”,our business mainly focus on the distribution of electronic components. Line cards we deal with include Microchip,ALPS,ROHM,Xilinx,Pulse,ON,Everlight and Freescale. Main products comprise IC,Modules,Potentiometer,IC Socket,Relay,Connector.Our parts cover such applications as commercial,industrial, and automotives areas.

We are looking forward to setting up business relationship with you and hope to provide you with the best service and solution. Let us make a better world for our industry!

Contact us

Tel: +86-755-8981 8866 Fax: +86-755-8427 6832
Email & Skype: info@chipsmall.com Web: www.chipsmall.com
Address: A1208, Overseas Decoration Building, #122 Zhenhua RD., Futian, Shenzhen, China

REVISIONS						
REV	ZONE	ECO	DESCRIPTION	DATE	BY	CHECK
A1	-	-	TECHNICAL DATA SHEET RELEASE	16 OCT 15	JLAG	-

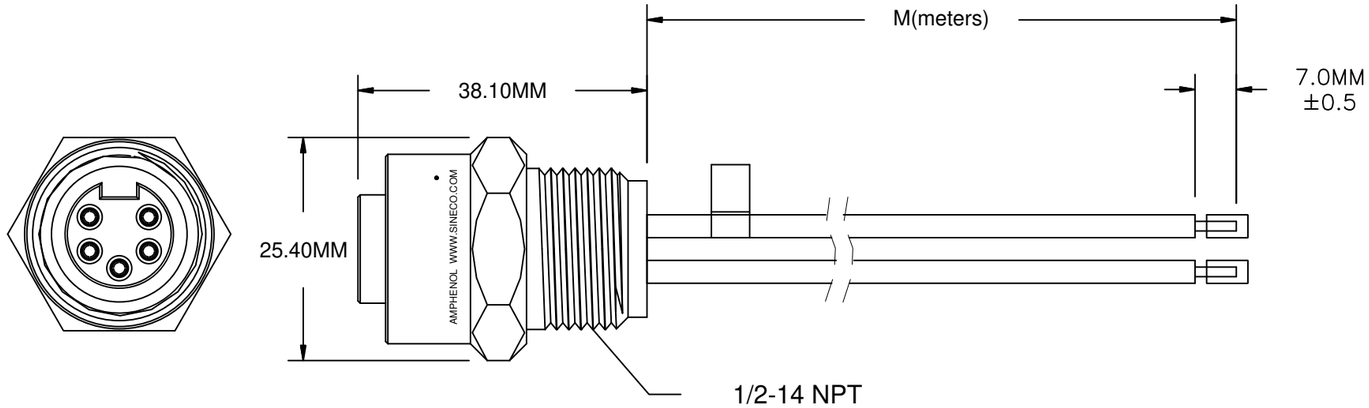

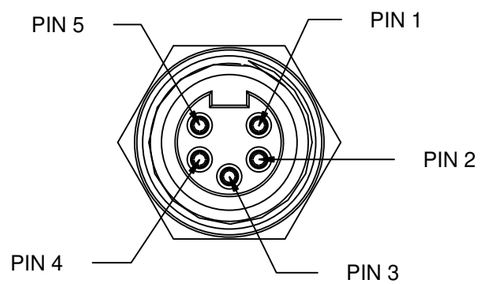

FACE VIEW

WIRING DIAGRAM

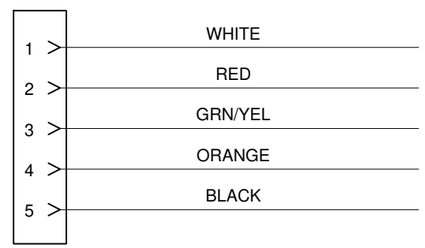

TECHNICAL DATA:

1) MATERIALS:
- COUPLING NUT: MACHINED ALUMINUM, ANODIZED
- INSULATION INSERT: THERMOPLASTIC, UL 94/V-0
- CONTACT: GOLD FLASH PLATING OVER COPPER ALLOY
- CABLE RATING: UL LISTED TYPE 1015, CSA CERTIFIED TYPE TEW, FT1 FLAME RATING, 600V, 105°C CABLE JACKET MATERIAL: PVC
- CONDUCTOR INSULATION: PVC
- NUMBER OF CONDUCTORS: (5) 16AWG

2) ELECTRICAL DATA:
- CURRENT (MAX): 8A
- VOLTAGE (MAX): 600V AC/DC
- INSULATION RESISTANCE (MIN): 5000M OHMS
- DIELECTRIC TEST VOLTAGE: 2200V

3) MECHANICAL DATA:
- TEMPERATURE RANGE: -20°C TO +105°C
- PROTECTION: IP67 (MATED CONDITION)
- MATING CYCLES: >500
- VIBRATION RESISTANCE PER MIL-STD-202 METHOD 204
- THERMAL SHOCK PER MIL-STD-202 METHOD 207
- 48 HOUR SALT SPRAY PER MIL-STD-202 METHOD 101

4) RoHS COMPLIANT
5) UL 2238 LISTED ASSEMBLY
UL FILE NUMBERS: E224856

Risk of Electrical Shock
Do Not Disconnect Under Load.
Risque de chocs electriques
Ne pas debrancher sous tension.
⚠WARNING

TOLERANCE
0-2.99 M = +100.0/-25.0mm
3-8.99 M = +150.0/-25.0mm
9-14.99 M = +300.0/-25.0mm
15-OVER M = +450.0/-25.0mm

QUANTITY	PART NUMBER	DESCRIPTION	ITEM
MATERIALS LIST			

UNLESS OTHERWISE SPECIFIED
1) All dimensions are in metric(mm).
2) Tolerances are as follows:
1 PL DEC ±0.30
2 PL DEC ±0.15
3 PL DEC ±0.08
Fractions ±1/64
Angles ±1°
3) Note reference = X

SIGNATURES		DATE
DRAWN:	KMM	12-MAY-14
CHECKED:	MRF	12-MAY-14
ENGINEER:	KMM	
APPROVAL:	RFC	12-MAY-14

MATERIAL SPECIFICATIONS:
PROCESS SPECIFICATIONS:
NEXT ASS'Y:
CUSTOMER:

THIS DRAWING IS SUPPLIED FOR INFORMATION ONLY. DESIGN FEATURES, SPECIFICATIONS AND PERFORMANCE DATA SHOWN HEREON ARE THE PROPERTY OF THE AMPHENOL CORPORATION. NO RIGHTS OF REPRODUCTION ARE IMPLIED. ALL DIMENSIONS ARE SUBJECT TO NORMAL MANUFACTURING VARIATIONS.

Amphenol
Sine Systems - www.sineco.com
44724 Morley Drive
Clinton Township, MI 48036

MINIBOSS M22 (7/8"), 5 PIN, FEMALE RECEPTACLE, INTERNAL THREADS, 16 AWG, UL1015, PVC WIRE

SIZE	TYPE	DWG NO:	REVISION
	C-	MN54PW02	A1

SCALE: HALF | C-MN54PW02 | SHEET 1 OF 1

TITLE: 5 PIN MINI, FEMALE, METERS
DWG NO: MN54PW02xxx
REV: B2
SH: 1
OF: 1