Chipsmall Limited consists of a professional team with an average of over 10 year of expertise in the distribution of electronic components. Based in Hongkong, we have already established firm and mutual-benefit business relationships with customers from,Europe,America and south Asia,supplying obsolete and hard-to-find components to meet their specific needs.

With the principle of “Quality Parts,Customers Priority,Honest Operation,and Considerate Service”,our business mainly focus on the distribution of electronic components. Line cards we deal with include Microchip,ALPS,ROHM,Xilinx,Pulse,ON,Everlight and Freescale. Main products comprise IC,Modules,Potentiometer,IC Socket,Relay,Connector.Our parts cover such applications as commercial,industrial, and automotives areas.

We are looking forward to setting up business relationship with you and hope to provide you with the best service and solution. Let us make a better world for our industry!

Contact us

Tel: +86-755-8981 8866 Fax: +86-755-8427 6832
Email & Skype: info@chipsmall.com Web: www.chipsmall.com
Address: A1208, Overseas Decoration Building, #122 Zhenhua RD., Futian, Shenzhen, China

Panasonic

DATA SHEET

(PRELIMINARY)

Part No.	MN63Y3213N1

* The specifications are subject to change without notice since it is under development.
* This is an engineering sample to mainly check functions during development. Reliability and delivery are not guaranteed.

Established: Jan.2015

Panasonic

About this manual

■ Organization

These specifications provide important information for users of the MN63Y3213N1, including an overview and descriptions of functions.

■ Manual Configuration

Each section of this manual consists of a title, main text, and notes. The layout and definition of each section are shown below.

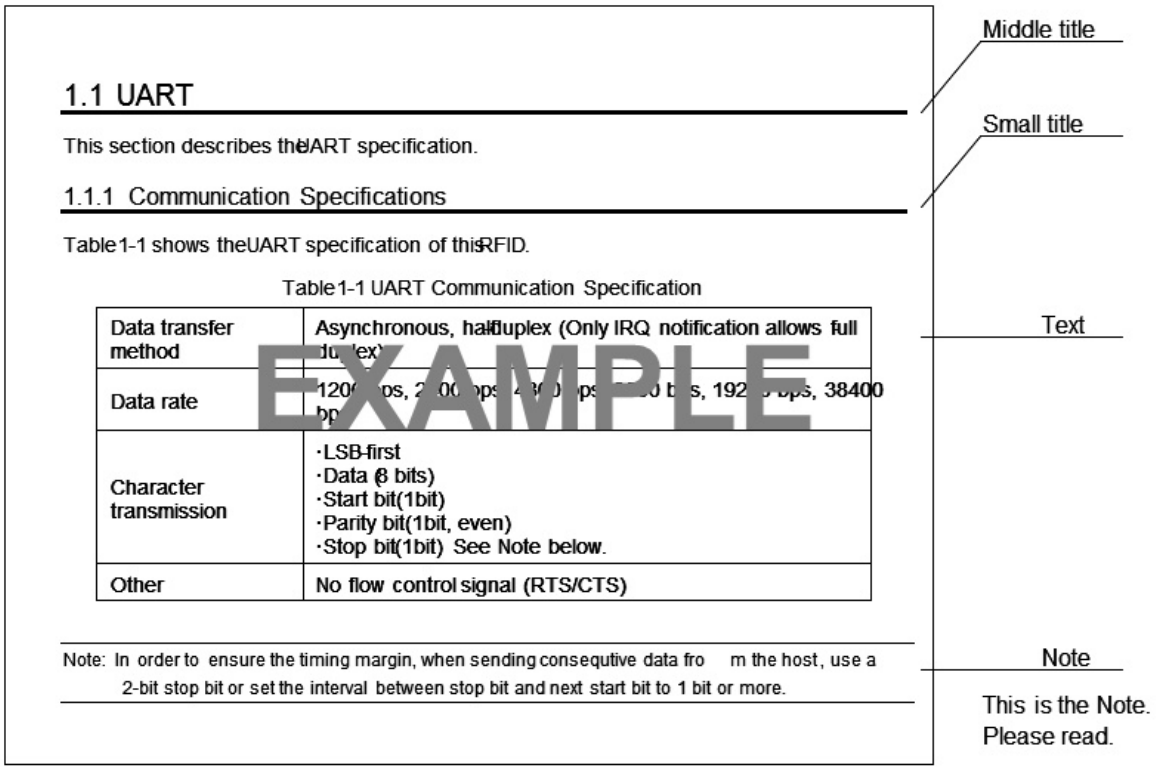

■ Finding Desired Information

This manual provides two methods for finding desired information quickly and easily.

1. Consult the table of contents at the front of the manual to locate desired titles.
2. Chapter names are located at the top outer corner of each page, and section titles are located at the bottom outer corner of each page.

Panasonic

Panasonic

Contents

1

Chapter 1 Overview

1.1 Features

The MN63Y3213N1 is an LSI for RFID (Radio Frequency Identification), which features the following:

- Built-in 4-Kbit non-volatile memory with fast write and low power consumption.
- RF interface compliant with JISX6319-4 (212 kbps / 424 kbps) and ISO/IEC14443 TypeB (106 kbps / 212 kbps) of the 13.56-MHz contactless IC card standards.
- Serial interface compatible with I2C (100 kHz)
- Batteryless RF communication
- Three communication modes of RF, serial, and tunnel (Tunnel mode allows communications between reader/writer and host CPU via this LSI.)
- Encryption communication function that uses AES (128 bits) private-key cryptosystem
- Supply voltage range: 1.7 V to 3.6 V

1.2 Block Diagram

Figure 1-1 shows a block diagram.

This RFID provides RF interface for contactless communication with external reader/writer, serial interface for contact communication with external host, control logic for command processing and various controls, 2-Kbit transmit/receive buffer for RF communication, 4-Kbit non-volatile memory, and AES cryptosystem.

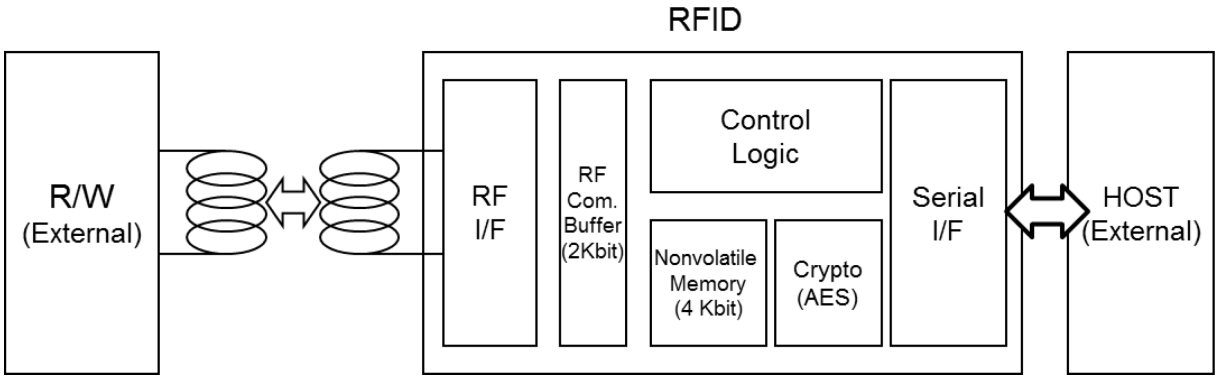

Figure 1-1 Block Diagram

1.3 Operation Mode

This RFID provides three operation modes of RF communication, serial communication, and tunnel.

Figure 1-2 gives the overview of each operation mode.

■ RF communication mode

This mode is used for communication between reader/writer and RFID. Reader/writer is the master and RFID is the slave. Key commands are read and write commands to non-volatile memory of RFID. This mode allows batteryless operations that use only the power supplied from the antenna of reader/writer.

For more information about RF communication mode, see Chapter 4 RF Communication Mode.

■ Serial communication mode

This mode is used for communication between host and RFID. Host is the master and RFID is the slave. Key commands are read and write commands to non-volatile memory of RFID. This mode requires a power supply to the supply voltage pin (VDDEX) of RFID.

For more information about serial communication mode, see Chapter 5 Serial Communication Mode.

■ Tunnel mode

This mode is used for communication between reader/writer and host via RFID. Reader/writer is the master and host is the slave. Key commands are read and write commands to host. This mode requires a power supply to the supply voltage pin (VDDEX) of RFID.

For more information about serial communication mode, see Chapter 7 Tunnel Mode.

Additionally, for state transition diagram in each operation mode, see Section 8.2 State Transition Diagram in Operation Mode.

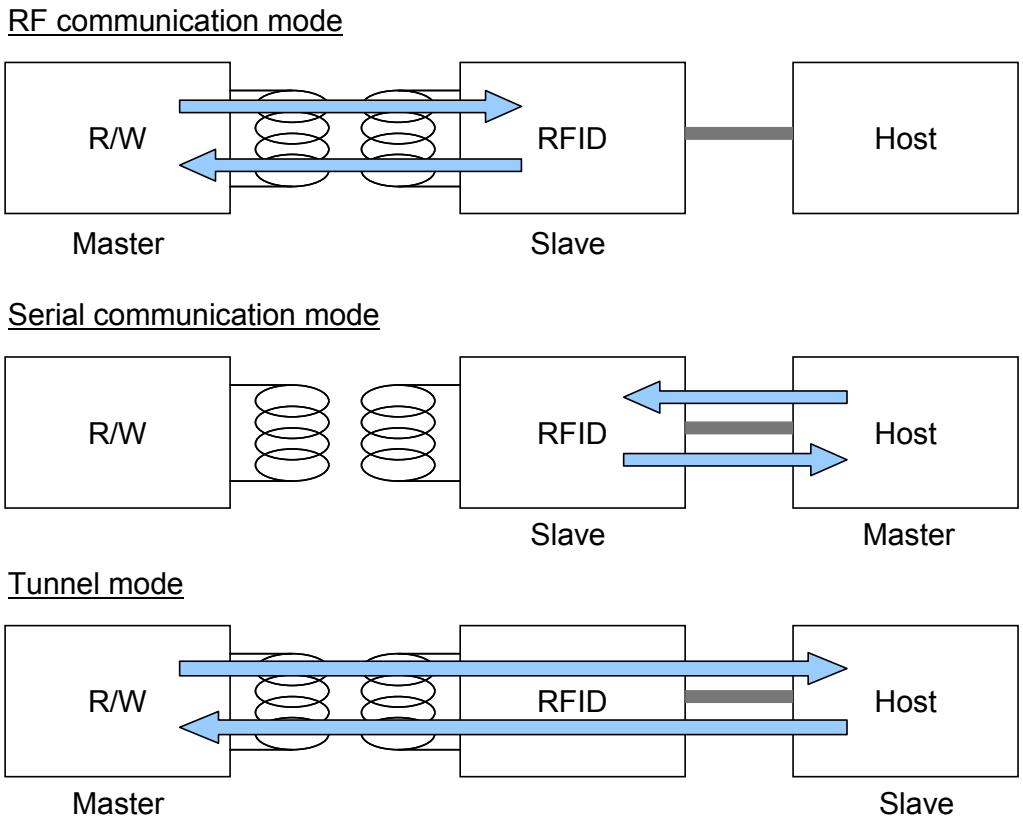

Figure 1-2 Operation Mode

1.4 Encrypted Communication Function

This RFID provides an encrypted communication function.

Figure 1-3 depicts its functionality in each operation mode.

For communication between reader/writer and RFID, RF communication mode allows both encrypted and plaintext (unencrypted) communications while serial communication mode allows only plaintext communication.

Tunnel mode enables both encrypted and plaintext communications between reader/writer and RFID. However, for communication between RFID and host, the mode enables only plaintext communication, regardless of communication form (encrypted or plaintext) between reader/writer and RFID.

Encrypted communication uses Message Authentication Code (MAC) to detect falsified communication data and to prevent access from illegal readers/writers.

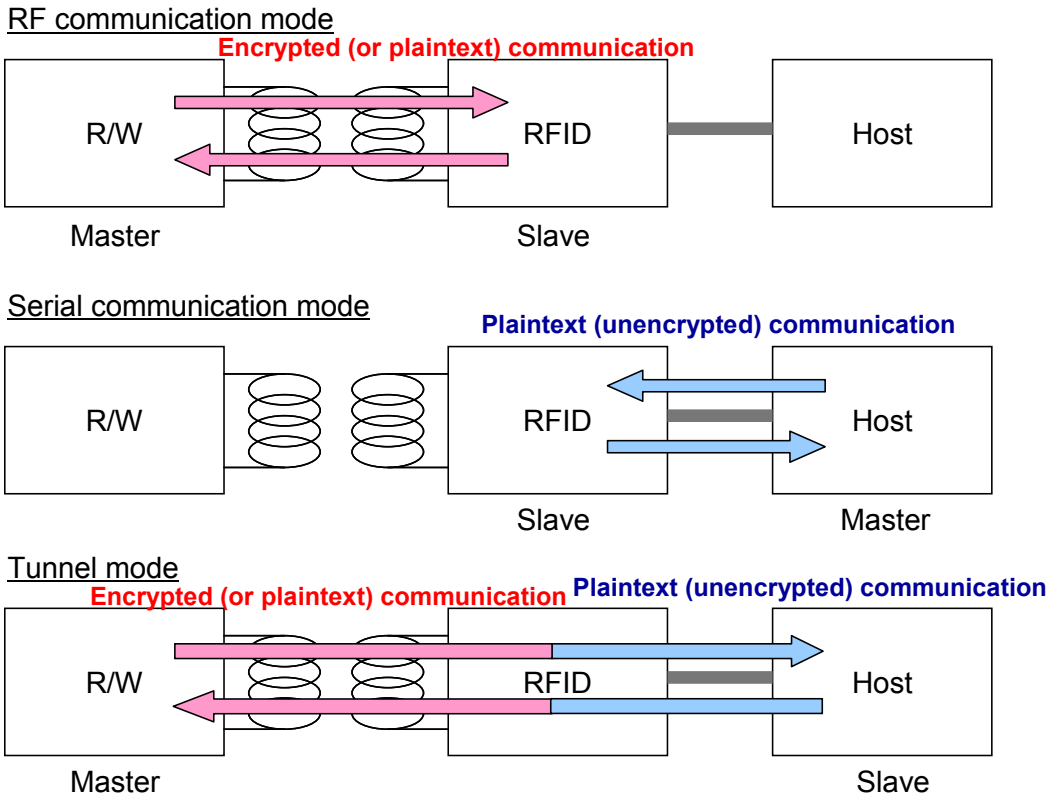

Figure 1-3 Encrypted Communication Function

Panasonic

Chapter 2 Pin Descriptions

2.1 List of Pins

Table 2-1 shows a list of pins of this RFID and Figure 2-1 illustrates the pin assignments of this RFID.

Table 2-1 List of Pins

Pin No.	Name	I/O	Output type	Description
1	N.C.	-	-	Non connection
2	VDDEX	-	Power	Contact power supply (Apply 1.7 V through 3.6 V.)
3	SDA	I/O	Open Drain	Host interface (I2C: 100 kHz)
4	VSS	-	GND	Ground
5	NIRQ	Output	Open Drain	Interrupt request output
6	SCL	Input	-	Host interface (I2C: 100 kHz)

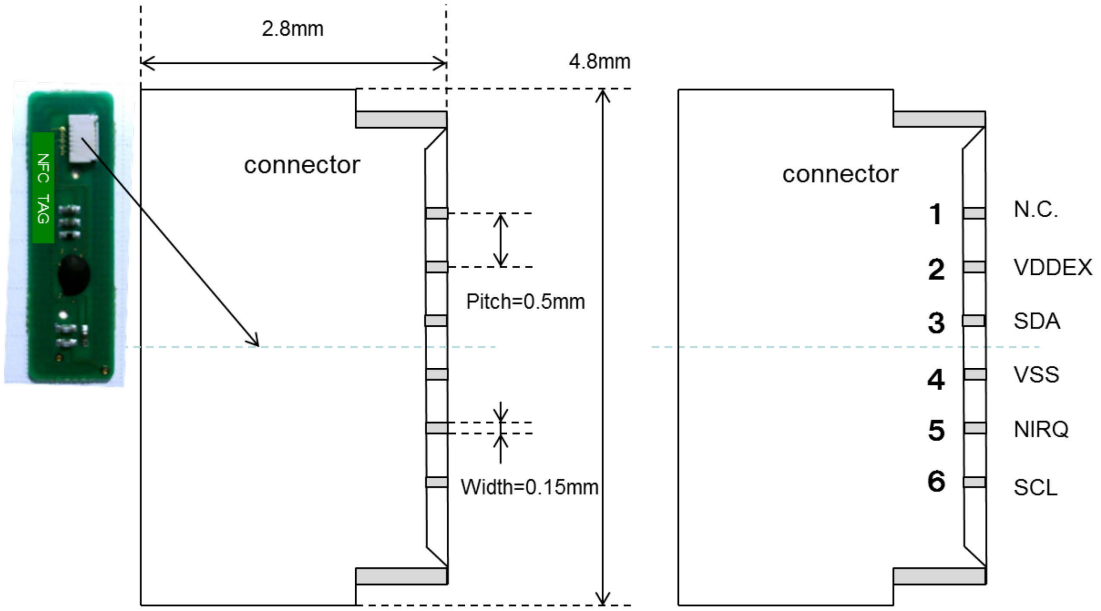

Connector : BL509N series (TAIWAN SUNCAGEY INDUSTRIAL CO., Ltd.)

Figure 2-1 Pin Assignments

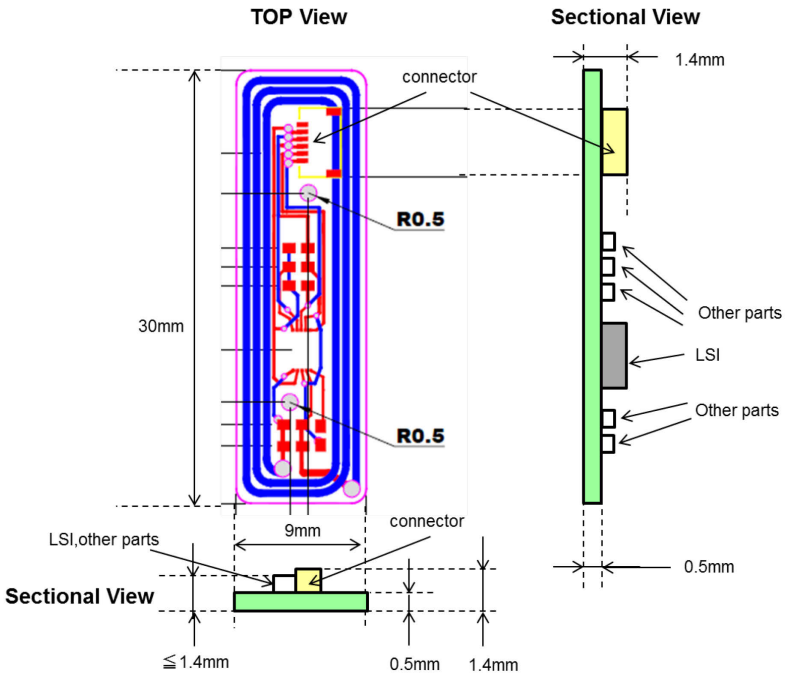

Figure 2-2 Outside drawing

2.2 Pin Descriptions

■ Ground (VSS)

A reference power supply pin. Connect to the ground of the host CPU.

■ Contact power supply (VDDEX)

A contact power supply pin. Apply a "high" voltage to this pin when communicating data between the host CPU and RFID. .

■ Host interface I2C (SDA, SCL)

I2C is an N-ch open drain pin, so should be pulled up to VDDEX externally. It is available between the frequencies 20 kHz and 100 kHz. Start the access t_{Boot} after applying VDDEX. For more information about t_{Boot}, see the Product Standards.

■ Interrupt request (NIQR)

An N-ch open drain pin to request an interrupt to the host and should be pulled up externally.

2.3 Connection Example

Figure 2-3 gives a connection example.

This example shows that the host's GPIO controls the RFID's VDDEX. In this case, when not using serial communication, turning VDDEX off allows the consumption current of the RFID to be turned off. In addition, it is also possible to supply a voltage to VDDEX directly from the power supply, not from the host's GPIO.

The SDA(IO) and NIRQ pins are open-drain output. Pull up these pins to the same voltage level as the power supply of the host.

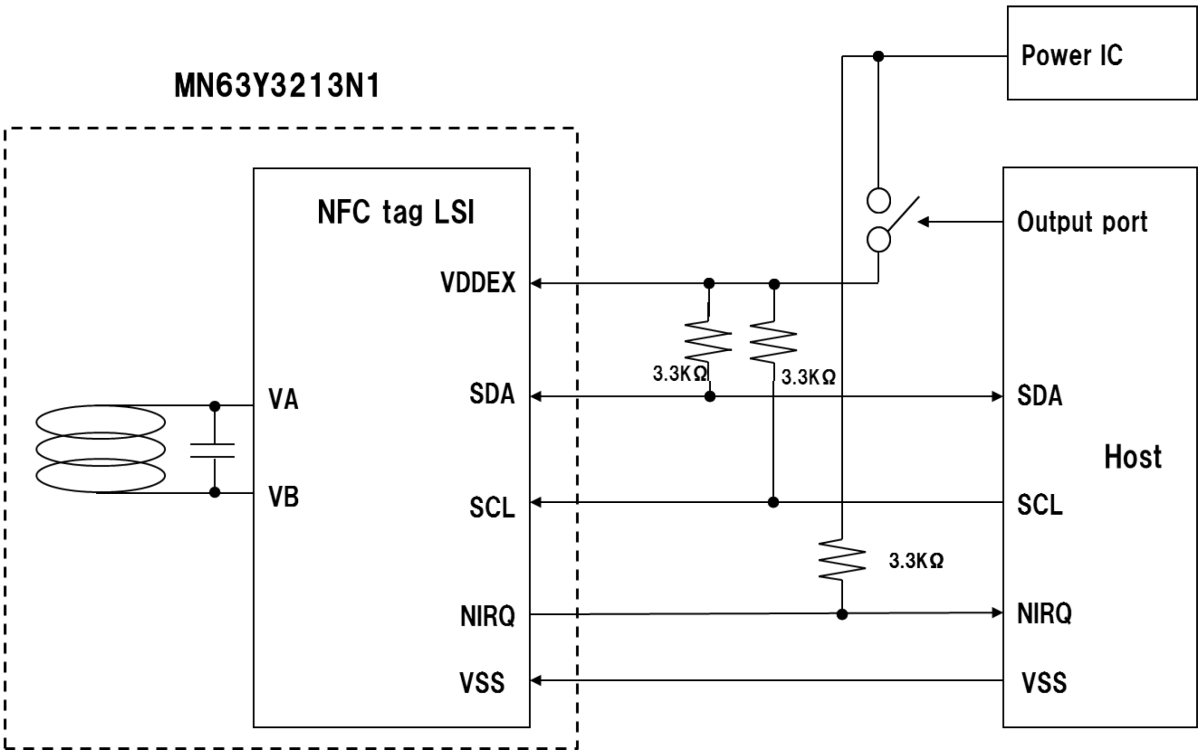

Figure 2-3 Connection Example

Panasonic

Chapter 3 Memory Map

3.1 Block Configuration

Figure 3-1 illustrates the block configuration of 4-Kbit non-volatile memory.
This LSI consists of 32 non-volatile memory blocks. The size of a block is 16 bytes.
The memory consists of two areas: user and system areas.
The system area stores RF-communication-related parameters and memory-access-control-related data, etc.

Block	Area	Type
0	16-byte non-volatile memory	User area
1	16-byte non-volatile memory	
2	16-byte non-volatile memory	
3	16-byte non-volatile memory	
…	…	
24	16-byte non-volatile memory	
25	16-byte non-volatile memory	
26	16-byte non-volatile memory	
27	16-byte non-volatile memory	System area
28	16-byte non-volatile memory	
29	16-byte non-volatile memory	
30	16-byte non-volatile memory	
31	16-byte non-volatile memory	

Figure 3-1 4-Kbit non-volatile memory Block Configuration

3.2 Physical Memory Map

Figure 3-2 presents the physical memory map.

Block	Address	0x0	0x1	0x2	0x3	0x4	0x5	0x6	0x7	0x8	0x9	0xA	0xB	0xC	0xD	0xE	0xF
0	0x0000	User Area															
1	0x0010	User Area															
2	0x0020	User Area															
3	0x0030	User Area															
4	0x0040	User Area															
5	0x0050	User Area															
6	0x0060	User Area															
7	0x0070	User Area															
8	0x0080	User Area															
9	0x0090	User Area															
10	0x00A0	User Area															
11	0x00B0	User Area															
12	0x00C0	User Area															
13	0x00D0	User Area															
14	0x00E0	User Area															
15	0x00F0	User Area															
16	0x0100	User Area															
17	0x0110	User Area															
18	0x0120	User Area															
19	0x0130	User Area															
20	0x0140	User Area															
21	0x0150	User Area															
22	0x0160	User Area															
23	0x0170	User Area															
24	0x0180	User Area															
25	0x0190	User Area															
26	0x01A0	User Area															
27	0x01B0	CONFIG															
28	0x01C0	CONFIG															
29	0x01D0	CONFIG															
30	0x01E0	SC		IDM								PMM		AFI	FWI	HW1	
31	0x01F0	RORF				ROSI				SECURITY				TNPRM	HW2	CONFIG	

Figure 3-2 Physical Memory Map

3.3 System Area

This section describes the system area.

3.3.1 Parameter Specifications

Each parameter of the system area is shown below.

All addresses and block numbers used in this section correspond to the physical address in Figure 3-2.

■ RORF (4 bytes)

RORF and SECURITY are an area to specify whether read/write or read-only is to be used in accessing the block by memory access commands in RF communication mode. Tabel 3-1 describes RORF and SECURITY setting, and shows RORF setting bits and corresponding block numbers. By default, all values are 0. Set all reserved bits to 0.

Tabel 3-1 RORF and SECURITY Setting

Value		Meaning -	
RORF	SECURITY	Plaintext communication	Encryption communication
0	0	READ/WRITE	READ/WRITE
0	1	Prohibition	READ/WRITE
1	0	READ ONLY	READ ONLY
1	1	READ ONLY	READ/WRITE

Tabel 3-2 RORF Setting Bits and Corresponding Block Numbers

Address	Bit 7	Bit 6	Bit 5	Bit 4	Bit 3	Bit 2	Bit 1	Bit 0
0x01F0	Block7	Block6	Block5	Block4	Block3	Block2	Block1	Block0
0x01F1	Block15	Block14	Block13	Block12	Block11	Block10	Block9	Block8
0x01F2	Block23	Block22	Block21	Block20	Block19	Block18	Block17	Block16
0x01F3	Reserved	Reserved	Reserved	Reserved	Reserved	Block26	Block25	Block24

■ ROSI (4 bytes)

ROSI is an area to specify whether read/write or read-only is to be used in accessing the block by memory access commands in serial communication mode. Table 3-1 describes ROSI setting, and Table 3-2 shows ROSI setting bits and corresponding block numbers. By default, all values are 0. Set all reserved bits to 0.

Table 3-1 ROSI Setting

Value	Meaning
0	Read/Write
1	Read only

Table 3-2 ROSI Setting Bits and Corresponding Block Numbers

Address	Bit 7	Bit 6	Bit 5	Bit 4	Bit 3	Bit 2	Bit 1	Bit 0
0x01F4	Block7	Block6	Block5	Block4	Block3	Block2	Block1	Block0
0x01F5	Block15	Block14	Block13	Block12	Block11	Block10	Block9	Block8
0x01F6	Block23	Block22	Block21	Block20	Block19	Block18	Block17	Block16
0x01F7	Reserved	Reserved	Reserved	Reserved	Reserved	Block26	Block25	Block24