Chipsmall Limited consists of a professional team with an average of over 10 year of expertise in the distribution of electronic components. Based in Hongkong, we have already established firm and mutual-benefit business relationships with customers from,Europe,America and south Asia,supplying obsolete and hard-to-find components to meet their specific needs.

With the principle of “Quality Parts,Customers Priority,Honest Operation,and Considerate Service”,our business mainly focus on the distribution of electronic components. Line cards we deal with include Microchip,ALPS,ROHM,Xilinx,Pulse,ON,Everlight and Freescale. Main products comprise IC,Modules,Potentiometer,IC Socket,Relay,Connector.Our parts cover such applications as commercial,industrial, and automotives areas.

We are looking forward to setting up business relationship with you and hope to provide you with the best service and solution. Let us make a better world for our industry!

Contact us

Tel: +86-755-8981 8866 Fax: +86-755-8427 6832
Email & Skype: info@chipsmall.com Web: www.chipsmall.com
Address: A1208, Overseas Decoration Building, #122 Zhenhua RD., Futian, Shenzhen, China

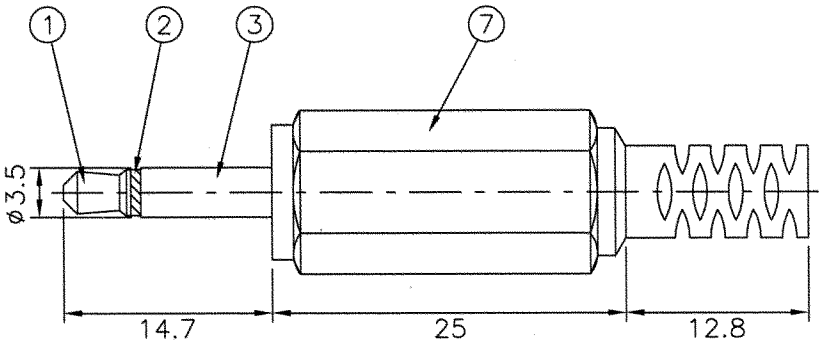

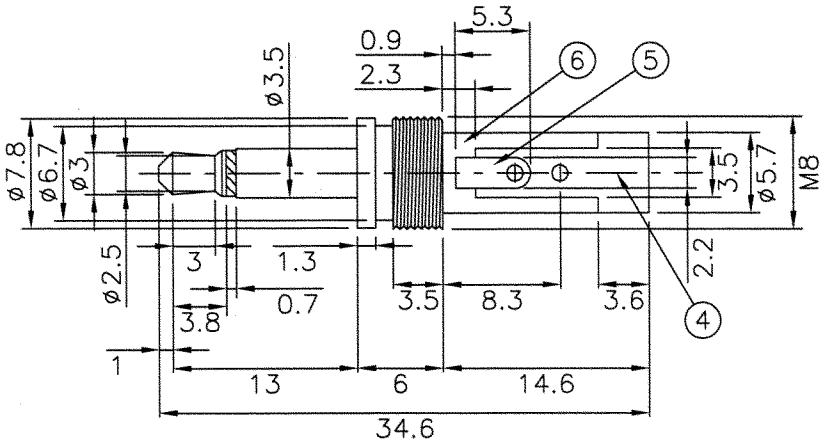

No	DESCRIPTION	MATERIAL	FINISH
1.	CONTACT HEAD	BRASS	NICKEL PLATED
2.	INSULATOR	POM	BLACK COLOR
3.	SLEEVE	BRASS	NICKEL PLATED
4.	EARTH TERMINAL	BRASS	NICKEL PLATED
5.	TIP TERMINAL	BRASS	NICKEL PLATED
6.	TERMINAL INSULATOR	POM	WHITE COLOR
7.	PLASTIC COVER	PE	BLACK COLOR

TOLERANCE: ±0.3MM UNLESS OTHERWISE SPECIFIED

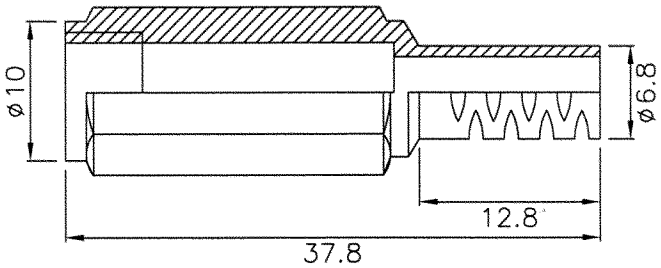

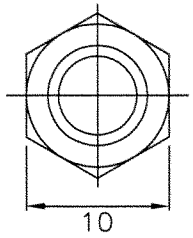

CUI INC

9615 SW Allen, Suite 103
Beaverton, OR 97005
Phone: (503) 643-4899
800-275-4899
Fax: (503) 643-6129
Website: www.cui.com

TITLE: 3.5ø MONO PHONE PLUG

PART NO.	UNITS:
MP-3501	Millimeters

DRAWN BY:	APPROVED BY:	SCALE:
Todd R. White		2X

PC FILE NAME: MP3501.DWG

COPYRIGHT 1997 BY CUI INC.