Chipsmall Limited consists of a professional team with an average of over 10 year of expertise in the distribution of electronic components. Based in Hongkong, we have already established firm and mutual-benefit business relationships with customers from,Europe,America and south Asia,supplying obsolete and hard-to-find components to meet their specific needs.

With the principle of “Quality Parts,Customers Priority,Honest Operation,and Considerate Service”,our business mainly focus on the distribution of electronic components. Line cards we deal with include Microchip,ALPS,ROHM,Xilinx,Pulse,ON,Everlight and Freescale. Main products comprise IC,Modules,Potentiometer,IC Socket,Relay,Connector.Our parts cover such applications as commercial,industrial, and automotives areas.

We are looking forward to setting up business relationship with you and hope to provide you with the best service and solution. Let us make a better world for our industry!

Contact us

Tel: +86-755-8981 8866 Fax: +86-755-8427 6832
Email & Skype: info@chipsmall.com Web: www.chipsmall.com
Address: A1208, Overseas Decoration Building, #122 Zhenhua RD., Futian, Shenzhen, China

DC-DC Converter DATA Sheet

MPDTY303S

1. Features

These are the Low Voltage/High current non-insulated type DC-DC Converter.
Low profile; 4.2mmMAX.
Wide operating temperature (-40 °C～+85 °C).
Output voltage is adjustable by using single external resistance (0.8-5.5V).
ON/OFF function is built in.
Output voltage sense function is built in.
Short circuit protection & over temperature protection is built in.

2. Appearance, Dimensions

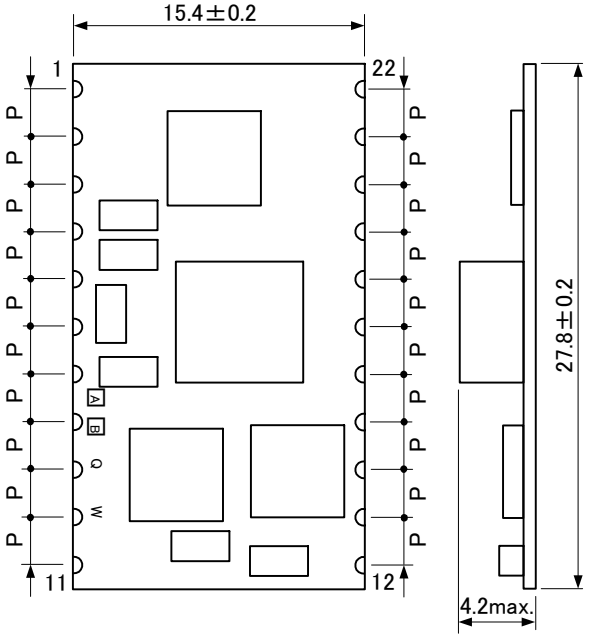

Marking
(1) Pin Nokg / MFG ID Ⓜ
(2) Part No. QW
(3) Lot No. AB
A : Production Year
B : Production Month（1,2,3,…9,O,N,D）

P=2.54 ±0.3mm
Tolerance is not accumulated.
【Unit：mm】

Pin Number and Function

Pin No.	Symbol	Function
1,2,3,4,5	Vout	Output
6,7,8,9,10, 18,19,20,21	GND	GND
11	VAR	Output voltage adjustment
12	ON/OFF	Remote ON/OFF
13,14,15,16,17	Vin	Input
22	SENSE	Output voltage sense

⚠ **Note:**

1. This datasheet is downloaded from the website of Murata Manufacturing co., ltd. Therefore, it' s specifications are subject to change or our products in it may be discontinued without advance notice. Please check with our sales representatives or product engineers before ordering.
2. This datasheet has only typical specifications because there is no space for detailed specifications. Therefore, please approve our product specifications or transact the approval sheet for product specifications before ordering.

2010.12.29

3. Block Diagram

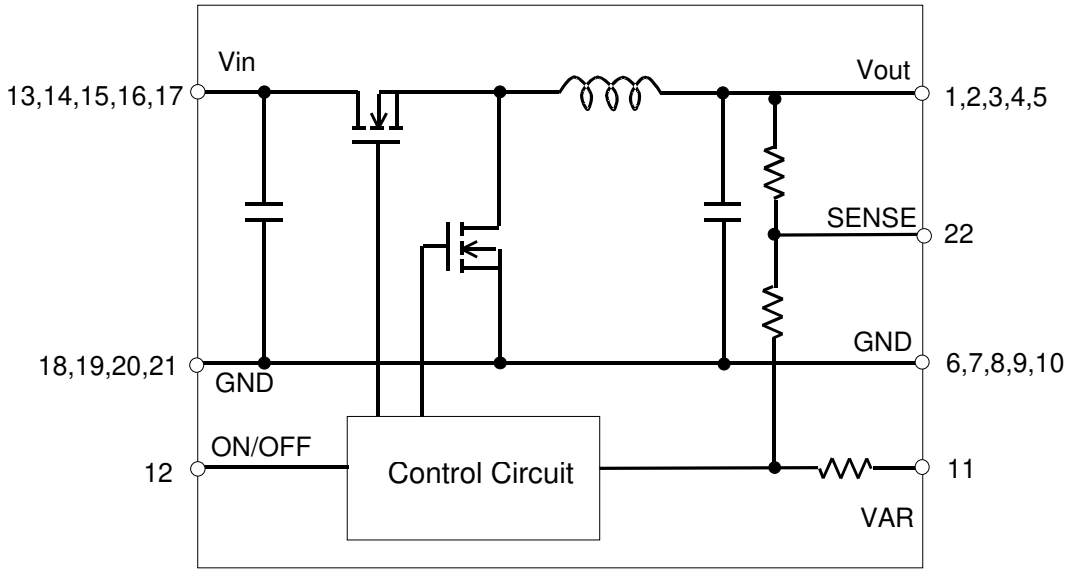

4. Environmental Conditions

4 .1	Input Voltage Range	6.5V – 14V
4 .2	Operating Temperature Range	-40 to +85 °C（Temperature gradient ≦10 °C /H）
4 .3	Storage Temperature Range	-45 to +90 °C（Temperature gradient ≦25 °C /H）
4 .4	Operating Humidity Range	10% ~ 85%（No water condenses in any cases.）
4 .5	Storage Humidity Range	10% ~ 90%（No water condenses in any cases.）
4 .6	Maximum Wet Bulb	39°C

5. Absolute Maximum Rating

Item	Unit	Absolute Rating	Remarks
Minimum Input Voltage	V	0	
Maximum Input Voltage	V	14	
ON/OFF　Pin Voltage	V	Vin	

※No voltage, no matter how instantaneous, shall be applied beyond the absolute maximum voltage rating to this product. If you apply any voltage over this limit the product characteristics will deteriorate or the product itself will be destroyed. Even though it may continue operating for a while after the over-voltage event, its life will likely be shortened significantly. Reliability and life of the module may degrade similarly if the maximum operating voltage rating is continuously exceeded. This product is designed to operate within the maximum operating voltage rating specification.

⚠ **Note:**

1. This datasheet is downloaded from the website of Murata Manufacturing co., ltd. Therefore, it' s specifications are subject to change or our products in it may be discontinued without advance notice. Please check with our sales representatives or product engineers before ordering.
2. This datasheet has only typical specifications because there is no space for detailed specifications. Therefore, please approve our product specifications or transact the approval sheet for product specifications before ordering.

6. Characteristics

6.1 Electrical Characteristics (Ta=25 °C)

Item	Symbol	Condition	Value			Unit
			Min.	Typ.	Max.	
Input Voltage Range	Vin		6.5	-	14	V
UVLO Threshold	UVLO		5.5	-	6.5	V
Output Voltage Adjustable Range	Vout	Vin-Vout>2.5V	0.8	-	5.5	V
Static Output Voltage Accuracy	Vout-0.8	Vin =6.5 - 13.2V, Iout= 0 - 8A VAR= Open, ON/OFF= Open	0.776	0.80	0.824	V
	Vout-5.5	Vin =8.0 - 13.2V, Iout= 0 -8A VAR= 311Ω, ON/OFF= Open	5.335	5.50	5.665	
Output Current	Iout	See thermal derating curve	0	-	8	A
Ripple Voltage	Vrpl	Vin =12V, Vout=3.3V, Ta=25 °C Iout=8A, BW=20MHz, Cout=44μF	-	25	50	mV(p_p)
Efficiency	η	Vin =12V, Vout=3.3V, Iout= 8A, Ta=25 °C	-	92	-	%
Operating Frequency			-	530	-	kHz
ON/OFF pin High Voltage	VIH	ON/OFF pin is connected to soft-start capacitor inside of this product. If ON/OFF pin is left open, this product shall be "ON". This pin will be pulled down to GND inside the product when OCP or OTP events occur. Please do NOT connect this pin to Vin, so as not to damage the converter.				
ON/OFF pin Low Voltage	VIL	If ON/OFF pin is pulled down to GND, this product shall be "OFF".	0	-	0.7	V
Short Circuit Protection	SCP	Reset, Followed by Auto-Recovery	8.5	15	-	A
Over Temperature Protection	OTP	Reset, Followed by Auto-Recovery	-	115	-	°C
Addirional Output Capacitor	Cout	When input voltage is ideal voltage source	44	-	1000	μF
Rising Overshoot	Vover		-	-	+10	%
Output Delay	Td	Output Voltage 0-10% (remote on)	-	8	20	msec
Output Rise Time	Tr	Output Voltage 10-90%	-	3	10	msec

※Caution

1. The above electrical characteristics are guaranteed in the condition that the impedance of the input voltage source is sufficiently low as shown in clause 9. Connecting an input inductance or using an input power supply with output inductance may cause an unstable operation of this product. Please check the proper operation of this product with the peripheral circuits on your product.

2. Connecting a LC filter to Vout and connecting the SENSE pin to the output of the LC filter may cause an unstable operation of this product because of the delay of the LC filter. Please check the proper operation of this product with the peripheral circuits on your product.

3. This product is not pre-bias compatible. This product will boost back the output voltage to the input voltage in start-up period and stop-down period. Please use a power supply that can sink current as the input voltage supply. If not so, please connect a sufficient capacitor to absorb the boost back current and check that the input voltage stays within the input voltage range.

⚠ **Note:**

1. This datasheet is downloaded from the website of Murata Manufacturing co., ltd. Therefore, it' s specifications are subject to change or our products in it may be discontinued without advance notice. Please check with our sales representatives or product engineers before ordering.
2. This datasheet has only typical specifications because there is no space for detailed specifications. Therefore, please approve our product specifications or transact the approval sheet for product specifications before ordering.

6.2 Thermal Derating

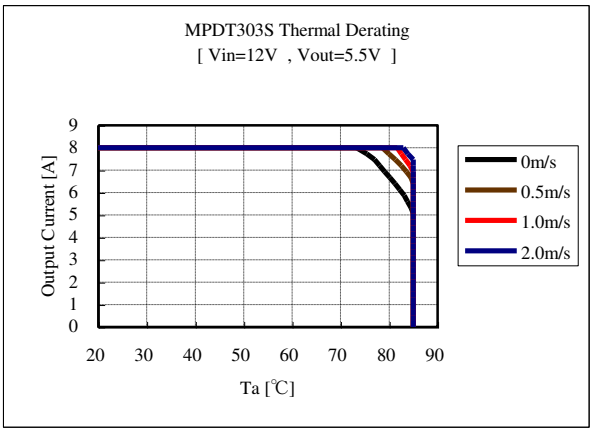

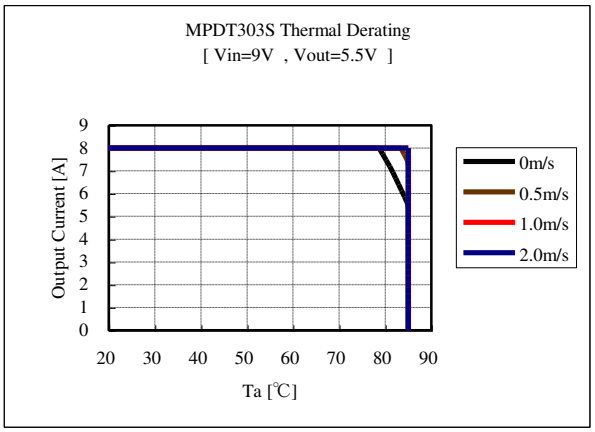

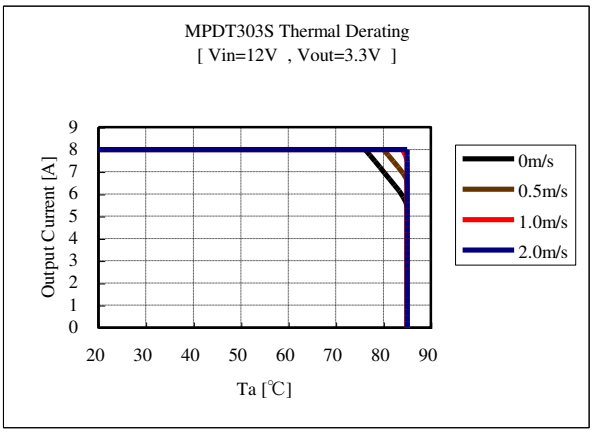

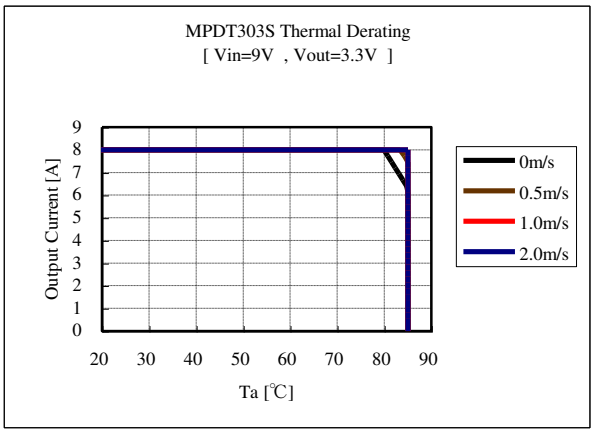

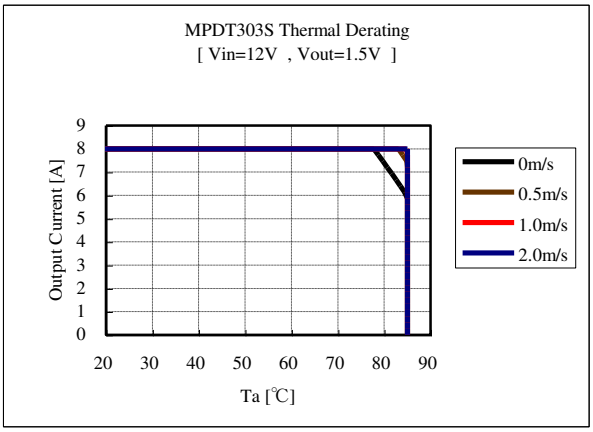

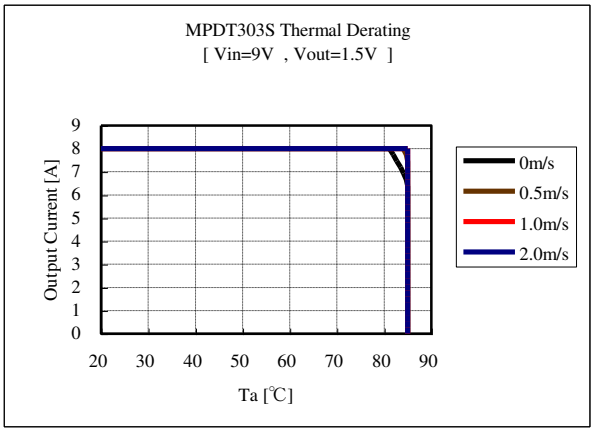

The above derating limits apply to this product soldered directly to 101.6×180mm×1.6mm PCB (double-sided, with 70um copper). Any adjacent parts of high temperature or difference of PCB design may cause overheat of this product. For reliable operation, please check that the FETs temperature of this product is below 120 °C, and the inductor temperature of this product is below 110 °C.

⚠ **Note:**

1. This datasheet is downloaded from the website of Murata Manufacturing co., ltd. Therefore, it' s specifications are subject to change or our products in it may be discontinued without advance notice. Please check with our sales representatives or product engineers before ordering.
2. This datasheet has only typical specifications because there is no space for detailed specifications. Therefore, please approve our product specifications or transact the approval sheet for product specifications before ordering.

7. Operation in information

7.1 Adjusting the Output Voltage

The output voltage can be adjusted ranging from 0.8V to 5.5V by connecting resistors between VAR-pin(11pin) to GND-pin.The following equation gives the required external-resistor value to adjust the output voltage to Vout. Please use this product on the condition Vin>Vout+2.5V

Internal circuit

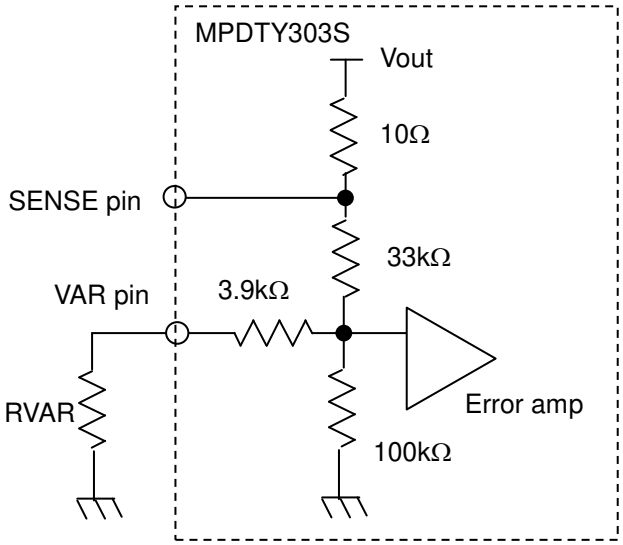

$$RVAR = \frac{19800}{Voadj[V]-0.798[V]} - 3900[\Omega]$$

RVAR calculation example

Voadj [V]	Calculated RVAR [Ω]	RVAR example
5.5	311	300
5.0	812	680 + 120
3.3	4013	3.9k + 110
2.5	7733	7.5k + 220
2.0	12573	12k + 560
1.8	15861	15k + 820
1.5	24305	24k + 300
1.2	45354	39k + 6.2k
1.0	94120	82k + 12k
0.8	9896100	Open

⚠ **Note:**

1. This datasheet is downloaded from the website of Murata Manufacturing co., ltd. Therefore, it' s specifications are subject to change or our products in it may be discontinued without advance notice. Please check with our sales representatives or product engineers before ordering.
2. This datasheet has only typical specifications because there is no space for detailed specifications. Therefore, please approve our product specifications or transact the approval sheet for product specifications before ordering.

7.2 ON/OFF Control

ON/OFF function

The DC-DC Converter can be inactive by using ON/OFF function.
This function is effective when the sequence of a power supply system is constituted.
And it can be used for power-saving control.

In case of not using ON/OFF function

In case of not using ON/OFF function, please left open ON/OFF-pin(12pin).
If ON/OFF pin is connected to Vin with low impedance line, OCP and OTP shall be inactive.

ON/OFF control method
Between ON/OFF-pin(12pin) and GND-pin
Open……Output Voltage=ON
Short……Output Voltage=OFF

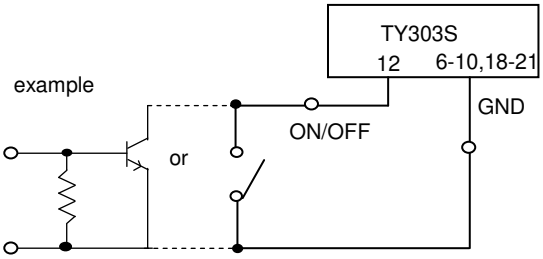

8. Reliability

8.1 Humidity

According to JIS-C-0022.
40 ± 2°C, 90 to 95%RH, 100 hours. Leave for 4 hours at room temperature.
No damage in appearance and no deviation from electrical characteristics (section 6.1).

8.2 Temperature Cycles

Repeat cycle 5 times. Leave 2 hours at room temp.
No damage in appearance and no deviation from electrical characteristics (section 6.1).

Step	Condition	Time
1	-40°C±3°C	30 minutes
2	Room Temp.	5-10 minutes
3	+85°C±2°C	30 minutes
4	Room Temp.	5-10 minutes

8.3 Vibration

10 to 55Hz, 1.5mm amplitude (1minute cycle), 1 hour for each of X, Y, Z directions.
No damage in appearance and no deviation from electrical characteristics (section 6.1).

8.4 Mechanical Shock

20G, 1 time for each X, Y, Z directions.
No damage in appearance and no deviation from electrical characteristics (section 6.1).

⚠ **Note:**

1. This datasheet is downloaded from the website of Murata Manufacturing co., ltd. Therefore, it' s specifications are subject to change or our products in it may be discontinued without advance notice. Please check with our sales representatives or product engineers before ordering.
2. This datasheet has only typical specifications because there is no space for detailed specifications. Therefore, please approve our product specifications or transact the approval sheet for product specifications before ordering.

9. Test Circuit
Using the following test circuit, the initial values under section 6.1 sall be met.

9.1. General Measure Circuit

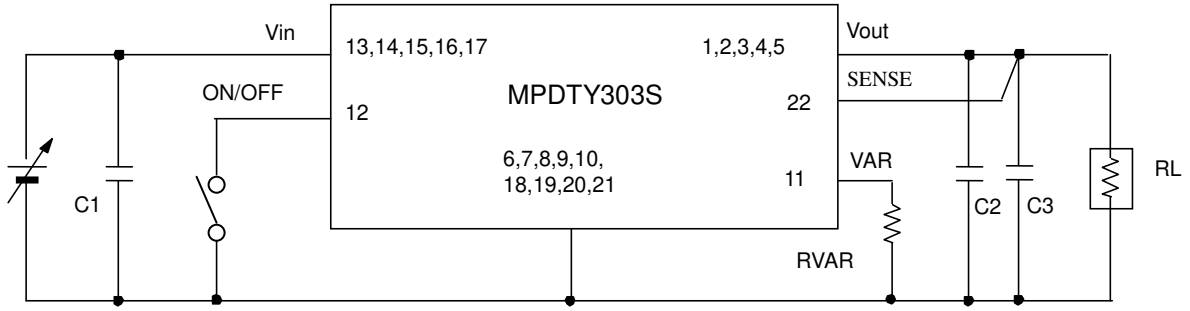

C1～C3 : 22μF／16V （Ceramic Capacitor）

Ripple Noise Measurement Circuit

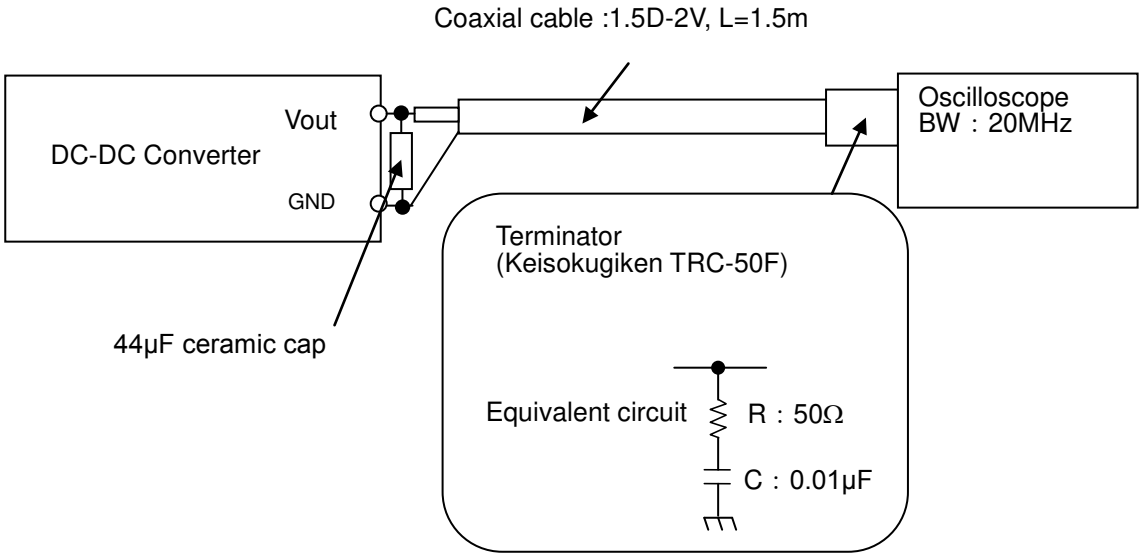

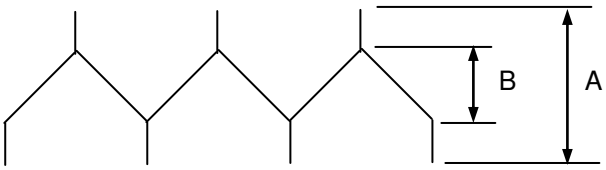

A : Output Ripple Noise
B : Output Ripple Voltage

⚠ **Note:**

1. This datasheet is downloaded from the website of Murata Manufacturing co., ltd. Therefore, it' s specifications are subject to change or our products in it may be discontinued without advance notice. Please check with our sales representatives or product engineers before ordering.
2. This datasheet has only typical specifications because there is no space for detailed specifications. Therefore, please approve our product specifications or transact the approval sheet for product specifications before ordering.

10. Packaging Specification

10.1 Embossed Tape Dimensions

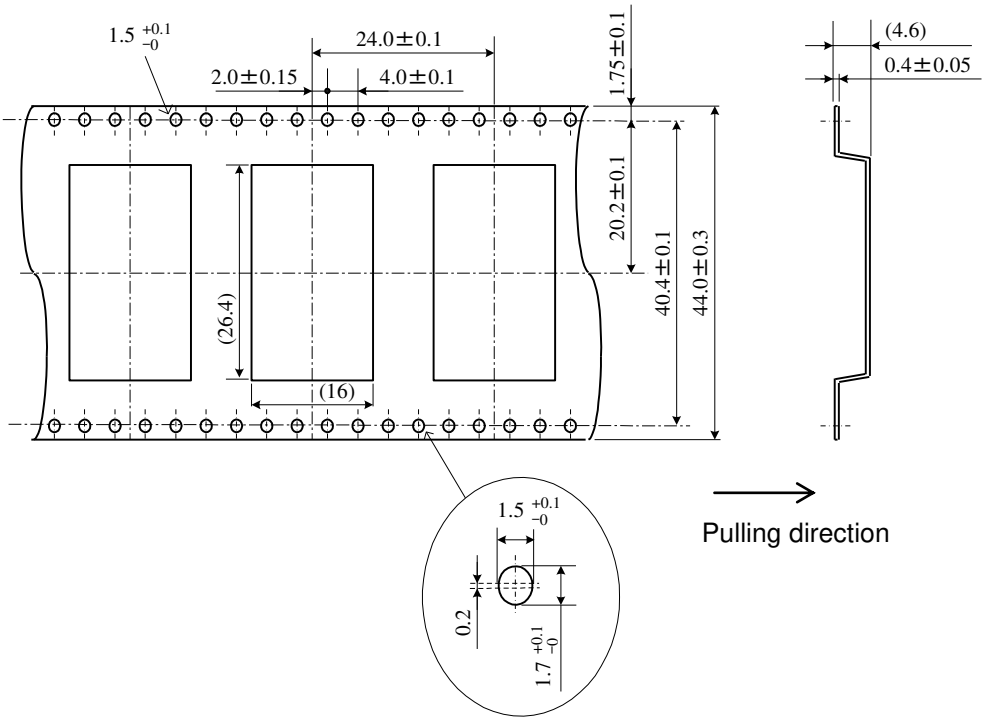

10.2 Reel Dimension

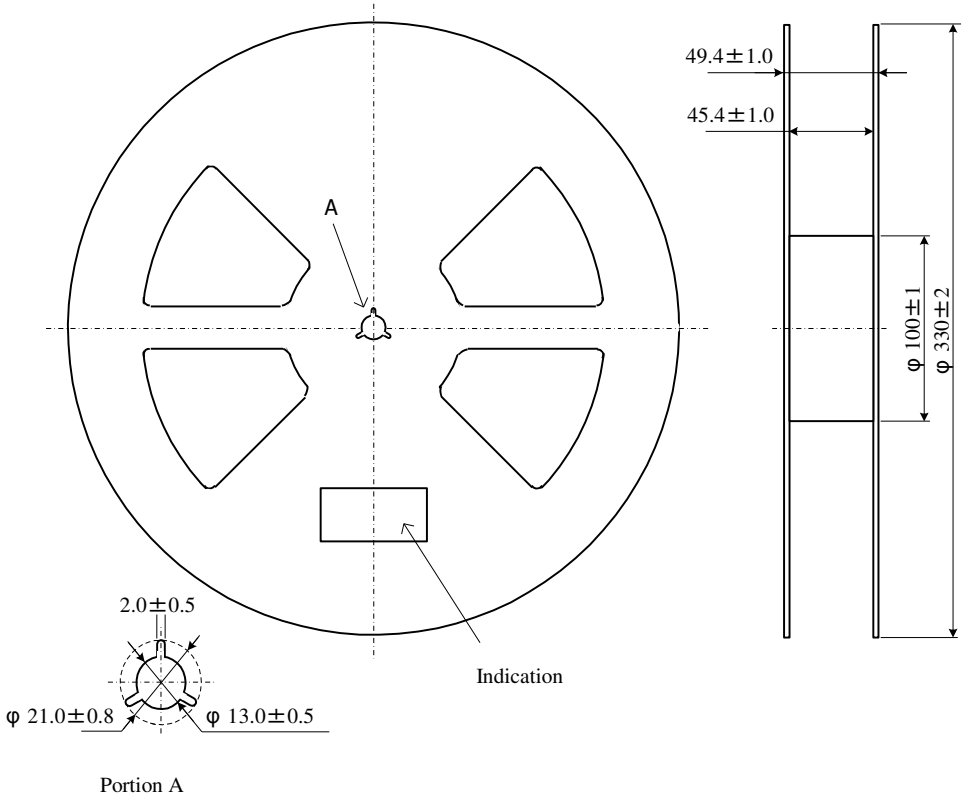

Note:

1. This datasheet is downloaded from the website of Murata Manufacturing co., ltd. Therefore, it' s specifications are subject to change or our products in it may be discontinued without advance notice. Please check with our sales representatives or product engineers before ordering.
2. This datasheet has only typical specifications because there is no space for detailed specifications. Therefore, please approve our product specifications or transact the approval sheet for product specifications before ordering.

10.3 Taping Specification

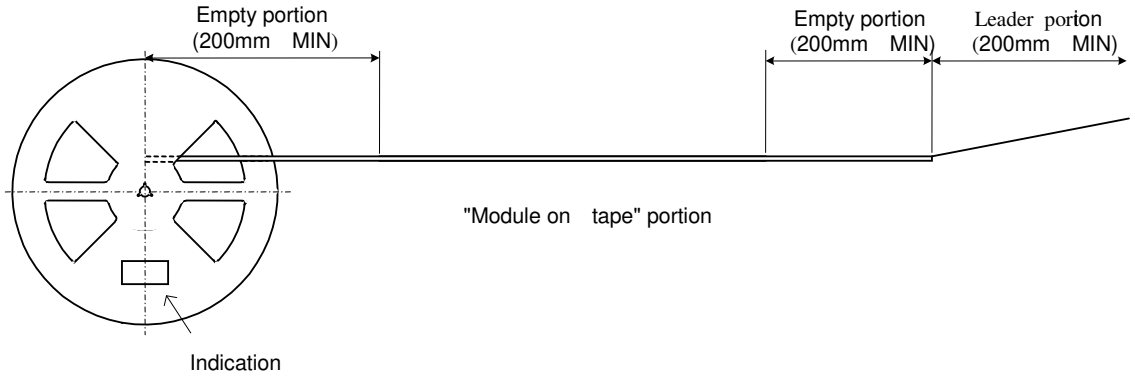

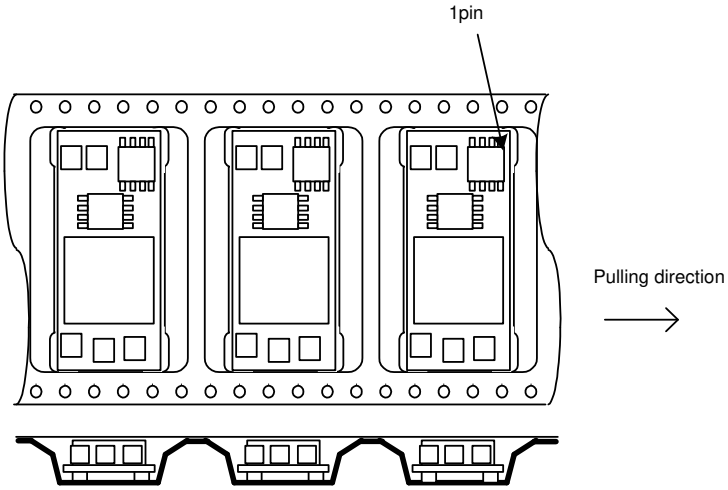

The module is located such as parts in upper side and substrate in lower side.

10.4 Note

1. The adhesive strength of the protective tape must be within 0.1-1N.
2. Each reel contains 300pcs.
3. The deficiency per reel is 0 piece.
4. The reel shows customer part number, Murata part number and quantity.
5. The color of reel is not designated.

11. Production factory

Komatsu Murata Mfg.Co., Ltd.
Kanazu Murata Mfg. Co., Ltd.
Wakura Murata Mfg. Co., Ltd.

⚠ **Note:**

1. This datasheet is downloaded from the website of Murata Manufacturing co., ltd. Therefore, it' s specifications are subject to change or our products in it may be discontinued without advance notice. Please check with our sales representatives or product engineers before ordering.
2. This datasheet has only typical specifications because there is no space for detailed specifications. Therefore, please approve our product specifications or transact the approval sheet for product specifications before ordering.

12. Characteristics Data

12.1.1 Vout=0.8V (Ta=25 °C, Iomax=8A, Cout=44μF)

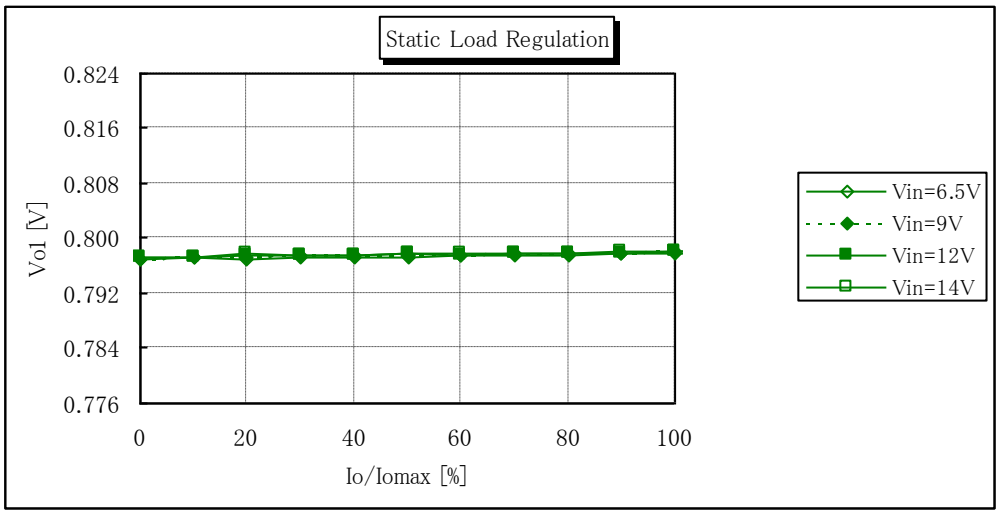

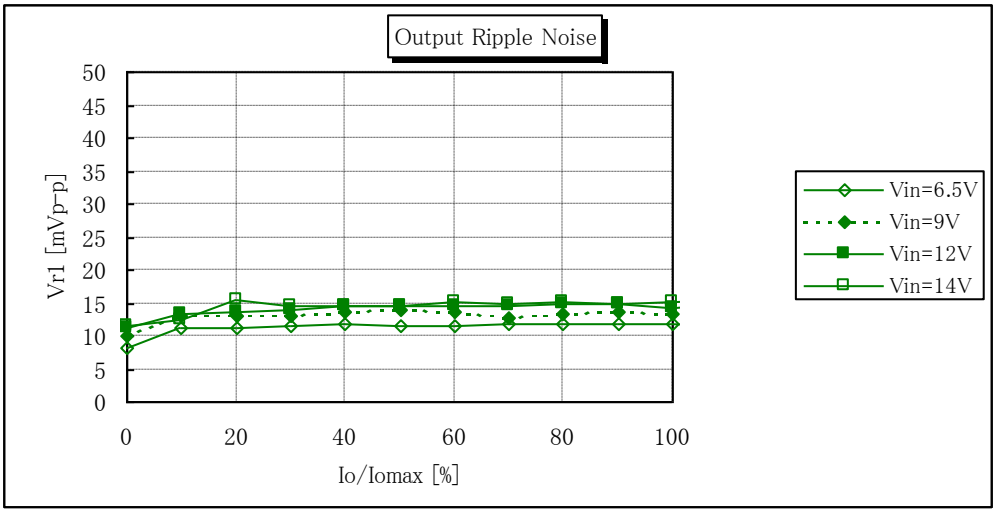

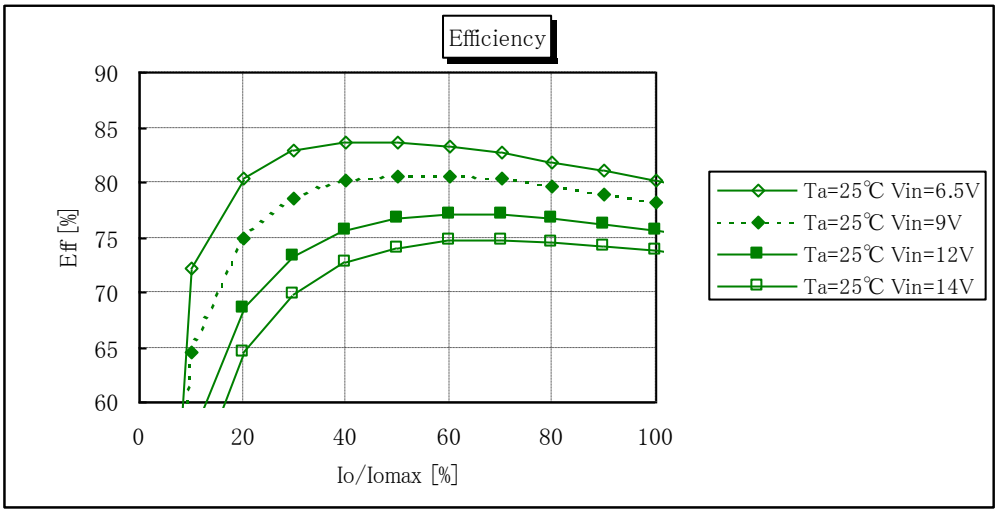

Note:

1. This datasheet is downloaded from the website of Murata Manufacturing co., ltd. Therefore, it' s specifications are subject to change or our products in it may be discontinued without advance notice. Please check with our sales representatives or product engineers before ordering.
2. This datasheet has only typical specifications because there is no space for detailed specifications. Therefore, please approve our product specifications or transact the approval sheet for product specifications before ordering.

12.1. 2 Vout=1.5V (Ta=25 °C, Iomax=8A, Cout=44μF)

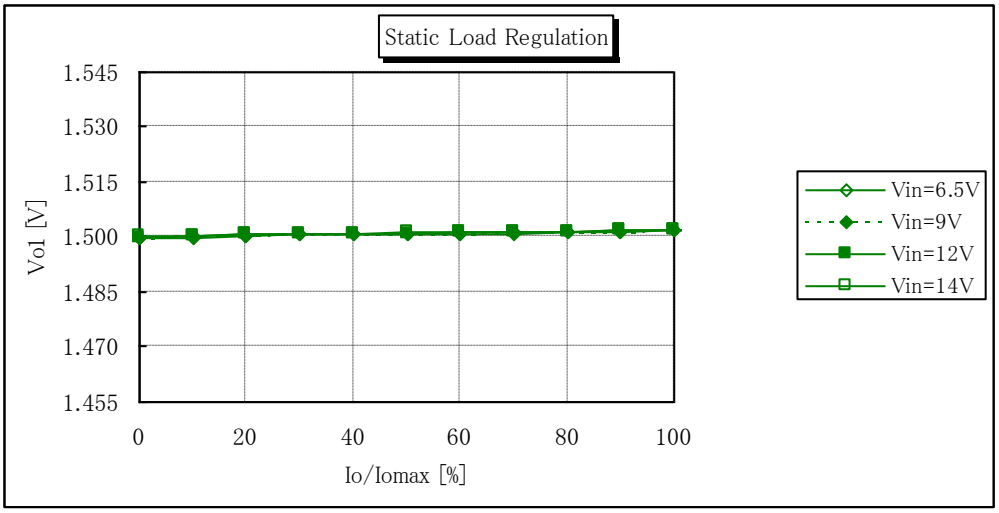

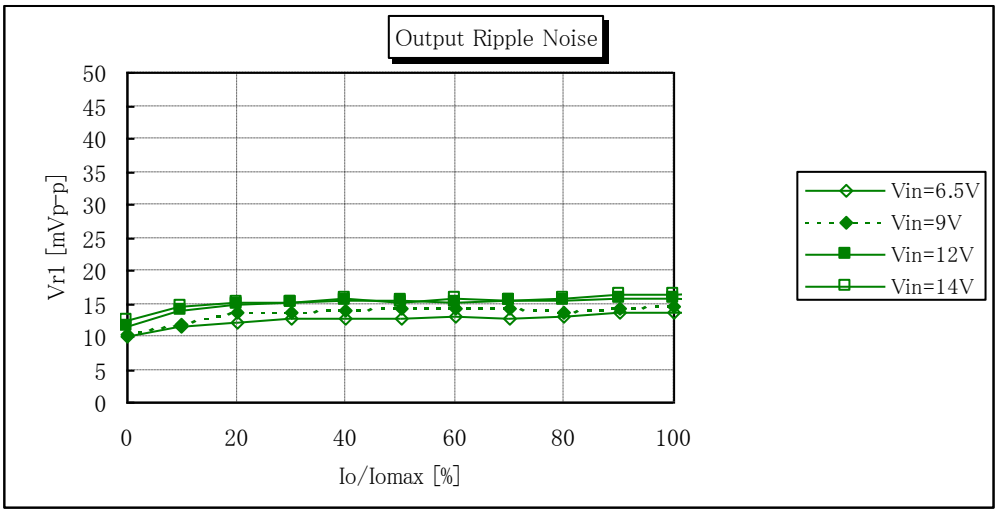

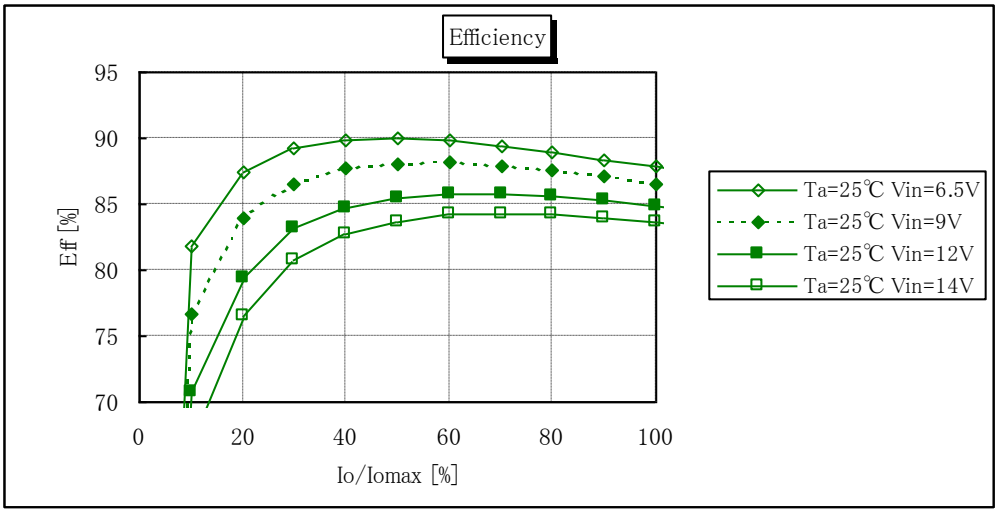

Note:

1. This datasheet is downloaded from the website of Murata Manufacturing co., ltd. Therefore, it' s specifications are subject to change or our products in it may be discontinued without advance notice. Please check with our sales representatives or product engineers before ordering.
2. This datasheet has only typical specifications because there is no space for detailed specifications. Therefore, please approve our product specifications or transact the approval sheet for product specifications before ordering.

2010.12.29

Murata Manufacturing Co., Ltd.
http://www.murata.com/

12. 1.3 Vout=3.3V (Ta=25 °C, Iomax=8A, Cout=44μF)

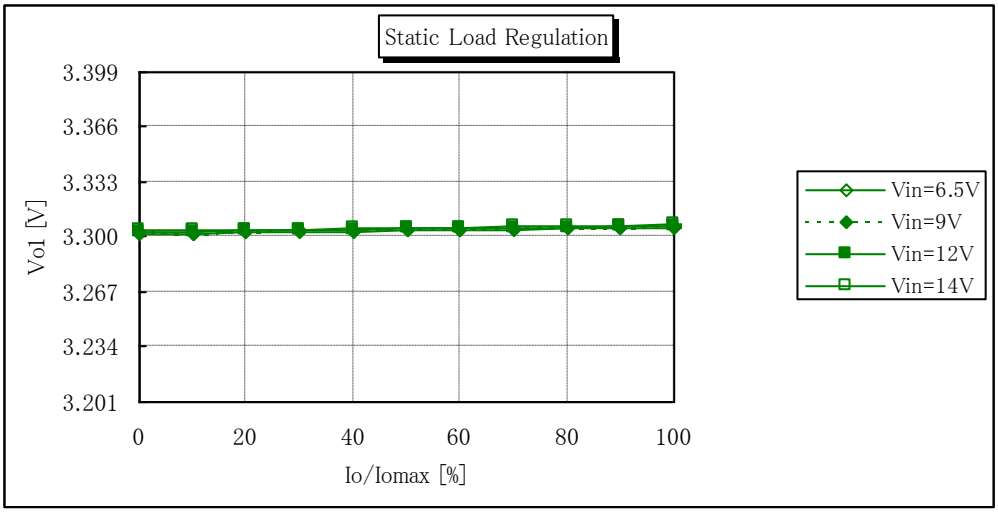

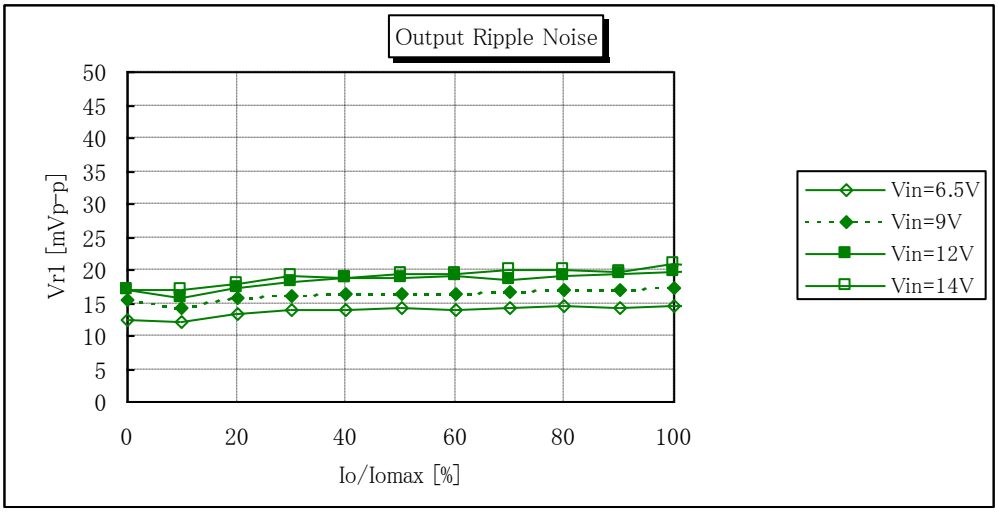

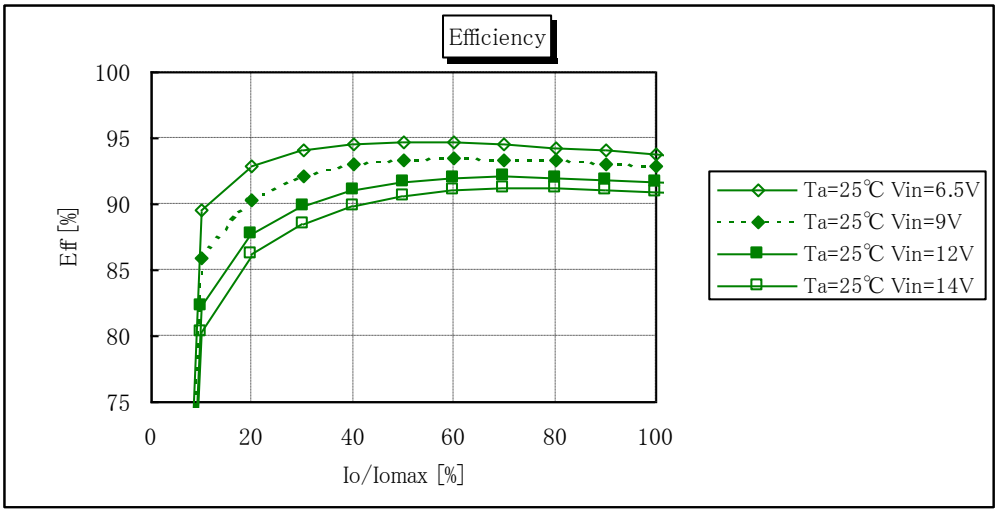

⚠ **Note:**

1. This datasheet is downloaded from the website of Murata Manufacturing co., ltd. Therefore, it' s specifications are subject to change or our products in it may be discontinued without advance notice. Please check with our sales representatives or product engineers before ordering.
2. This datasheet has only typical specifications because there is no space for detailed specifications. Therefore, please approve our product specifications or transact the approval sheet for product specifications before ordering.

12.1.4 Vout=5.5V (Ta=25 °C, Iomax=8A, Cout=44μF)

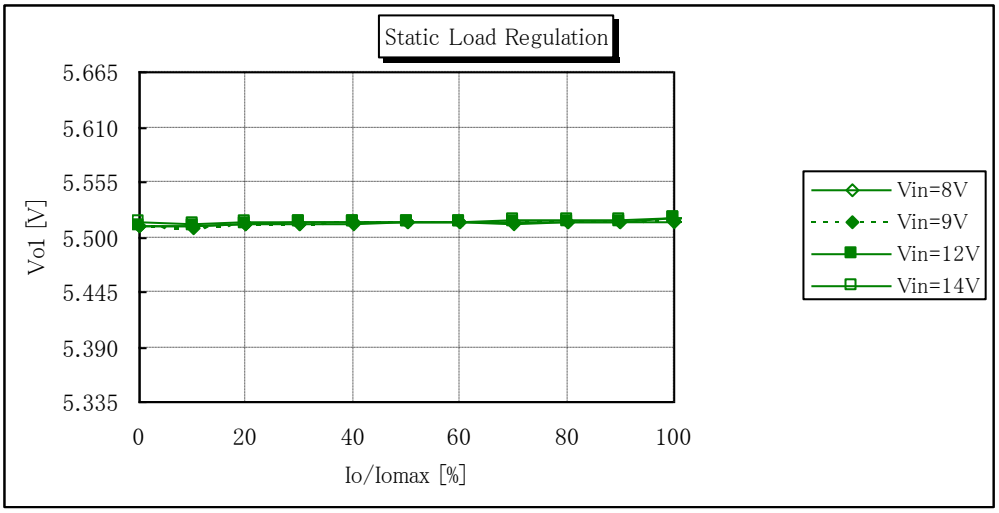

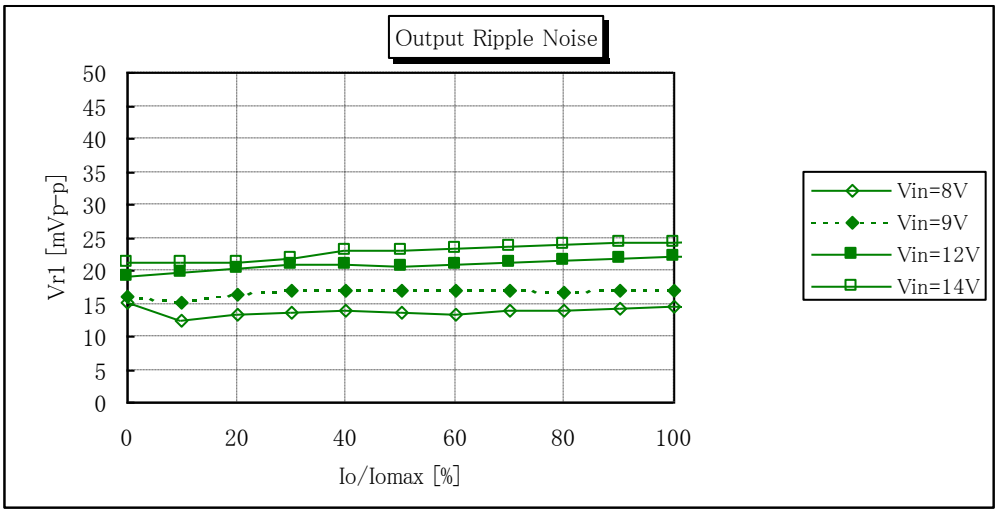

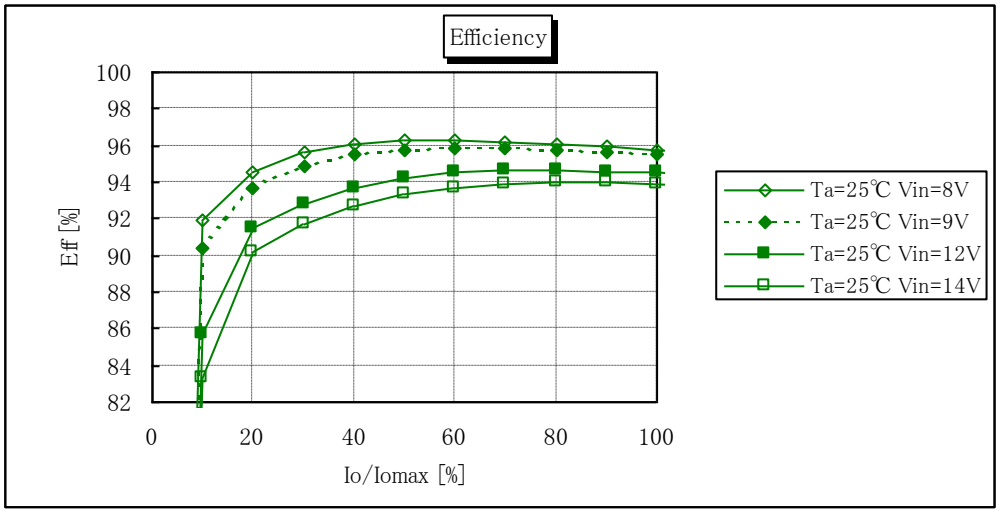

Note:

1. This datasheet is downloaded from the website of Murata Manufacturing co., ltd. Therefore, it' s specifications are subject to change or our products in it may be discontinued without advance notice. Please check with our sales representatives or product engineers before ordering.
2. This datasheet has only typical specifications because there is no space for detailed specifications. Therefore, please approve our product specifications or transact the approval sheet for product specifications before ordering.

13. Mounting Condition

13.1. Recommendable Solder Land Pattern

There are wiring coppers or through-hole via
at the bottom side of the DC-DC Converter.
When you design your PCBs, please be careful
not to short the circuit of the DC-DC Converter or PCBs.

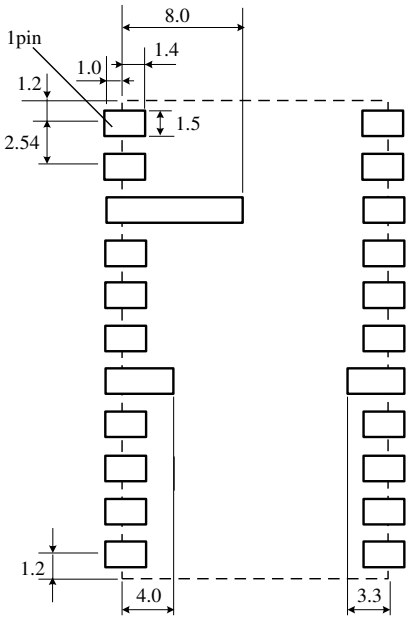

13.2. Recommendable Condition of Soldering

This product is RoHS compatible. The following profile is recommended for the reflow of this product using Pb-free solder paste (Sn-Ag-Cu).

Method : Full convection reflow soldering

Reflow Soldering Profile
JEDEC IPC/JEDEC J-STD-020D
Table 5-2 Classification Reflow Profile
Pb-Free Assembly Large Body

Profile details

Soldering temperature	:	245 °C +0/-5 °C
Soldering time	:	30 seconds, 240 to 245 °C
Heating time	:	60 to 150 seconds, over217 °C
Preheating time	:	60 to 120 seconds,150 to 200 °C
Programming rate	:	3 °C / sec. Max.,217 to 245 °C
Descending rate	:	6 °C / sec. Max.
Total soldering time	:	8 minutes Max., 25 to 245 °C
Times	:	1time

Parts surface temperature [°C]

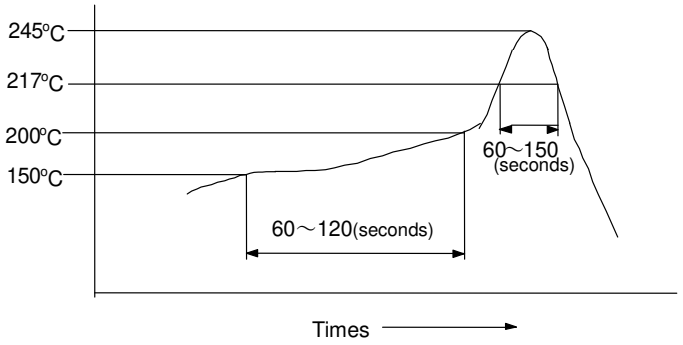

※Do not add vibration to this product during reflow.
Please carefully regulate temperature control as mounted parts may come off from this product if left under the high temperature for an extended time.

⚠ **Note:**

1. This datasheet is downloaded from the website of Murata Manufacturing co., ltd. Therefore, it' s specifications are subject to change or our products in it may be discontinued without advance notice. Please check with our sales representatives or product engineers before ordering.
2. This datasheet has only typical specifications because there is no space for detailed specifications. Therefore, please approve our product specifications or transact the approval sheet for product specifications before ordering.

14. Notice

14.1. Input / output capacitor

When an inductance or a switch devise is connected to the input line, or when you use a power supply with output inductance as the input voltage source, the input voltage of the DC-DC converter will be fluctuated. By this input voltage fluctuation, the transient load response of the DC-DC converter may be deteriorated or abnormal oscillation may occur. So please confirm normal operation on each application.
Please use external input capacitor in order to decrease inductance of input line.
In case you use external output capacitor in order to improve transient load response, please use input capacitor to prevent abnormal oscillation. When you use external capacitors, following capacitors are recommendable.

※Input capacitor C1 : Please use capacitors more than 22μF of low impedance in high frequency range.
Output capacitor C2, C3 : Please use ceramic capacitors more than 22μF (total 44μF).
Total capacitance of external output capacitors should be less than 1000μF.

14.2. Output LC filter

Connecting a LC filter to Vout and connecting the SENSE pin to the output of the LC filter may cause an unstable operation of this product because of the delay of the LC filter. Please check the proper operation of this product with the peripheral circuits on your product.

14.3. Pre-bias start up

This product is not pre-bias compatible. This product will boost back the output voltage to the input voltage in start-up period and stop-down period. Please use a power supply that can sink current as the input voltage supply. If not so, please connect a sufficient capacitor to absorb the boost back current and check that the input voltage stays within the input voltage range.

14.4. Wiring of input / output capacitor

In the case of input / output capacitor connection, in order to reduce electrical noise, please design PCBs with consideration of the following item.

①.Please be sure to check normal operation on your system.

②.Please use low impedance capacitors with good high frequency characteristic.

③.Please shorten those leads of each capacitor as much as possible, and make sure the lead inductance low.

④.Both input-side and output side, please make the wiring loop between plus and minus as small as possible. The influence of leakage inductance can be reduced.

⑤.Please design the print pattern of the main circuit as wide and short as possible.

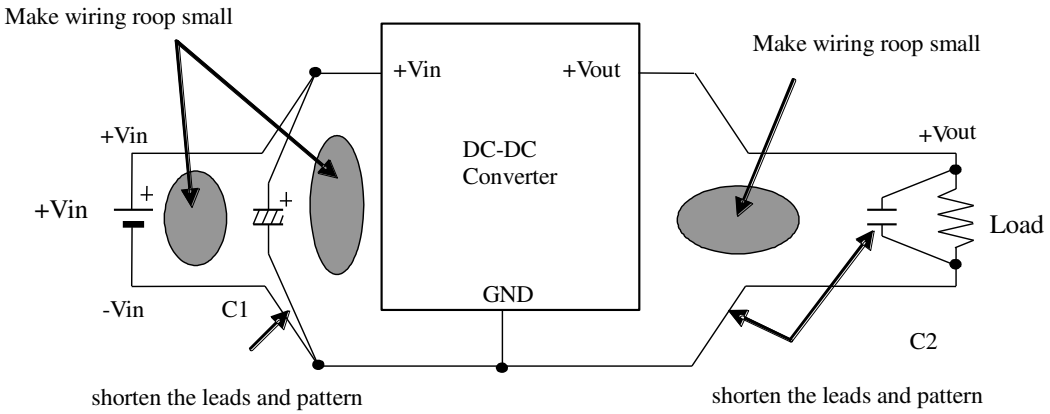

14.5. This product could not be operated parallel or series.

14.6. Please do not use a connector or a socket for connection with your board of this product.
Electrical performance may be deteriorated the influence of contact resistance.
Please be sure to mount this product with solder.

⚠ **Note:**

1. This datasheet is downloaded from the website of Murata Manufacturing co., ltd. Therefore, it' s specifications are subject to change or our products in it may be discontinued without advance notice. Please check with our sales representatives or product engineers before ordering.
2. This datasheet has only typical specifications because there is no space for detailed specifications. Therefore, please approve our product specifications or transact the approval sheet for product specifications before ordering.

14.7. Be sure to provide an appropriate fail-safe function on your product to prevent a second damage that may be caused by the abnormal function or the failure of our product.

14.8. Please connect the input terminal with proper polarity.If you connect wrong polarity, the DC-DC Converter may be broken. In the case of the DC-DC Converter is damaged, abnormal input current may flow in, and abnormal overheat of the DC-DC Converter, or some damage of your products may occur. Please use a diode and a fuse to as following figure.

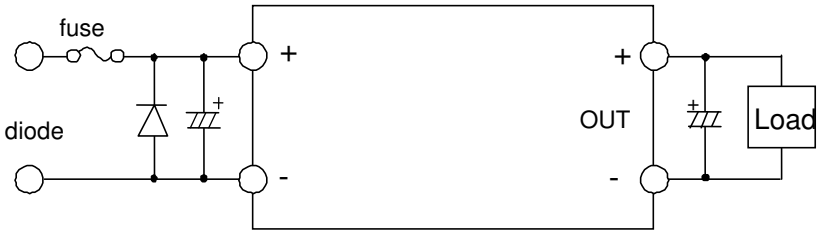

※Please select diode and fuse after confirming the operation.

14.9 Cleaning
Please use no-clean type flux and do not wash this product.

14.10 Storage

14.10.1 This product does not need to be baked before reflow process in condition that it is stored less than 1 year at below 30 °C / 60%R.H. and is reflowed at the recommendable condition of soldering, which is described at 13.2.
In case you store them over the limit, please bake this product before soldering.
If these are unpacked condition, please bake them at 125 °C±5 °C / 24hour. If these are packed in a tape, please bake them before soldering at 40 °C / 5%/ 192hour.
Avoid damp heated places or such places where there are large temperature changes, because water may condense on the products, the characteristics may be reduced in quality, and/or be degraded in the solderability.
If you store the products for a long time (more than 1 year), the products may be degraded in solderability and may be rusty. Please confirm solderability for the products regularly.

14.10. 2 Please do not store the products in the places such as in a dusty place, in a place exposed directly to sea breeze, in an atmosphere containing corrosive gas (Cl2,NH3,SO2,NOX and so on)

14.11 Operational Environment and Operational Conditions

14.11.1 Operational Environment
The products are not waterproof, chemical-proof or rust-proof.
In order to prevent leakage of electricity and abnormal temperature increase of the products, do not use the products under the following circumstances:
(1) in an atmosphere containing corrosive gas (Cl2, NH3, SO2, NOX and so on)
(2) in a dusty place
(3) in a place exposed to direct sunlight
(4) in such a place where water splashes or in such a humid place where water condenses
(5) in a place exposed to sea breeze
(6) in any other places similar to the above (1)through (5)

14.11.2 Operational Conditions
Please use the products within specified values (power supply, temperature, input, output and load condition, and so on). Input voltage drop for line impedance, so please make sure that input voltage is included in specified values.
If you use the products over the specified values, it may break the products, reduce the quality, and even if the products can endure the condition for short time, it may cause degradation of the reliability.

⚠ **Note:**

1. This datasheet is downloaded from the website of Murata Manufacturing co., ltd. Therefore, it' s specifications are subject to change or our products in it may be discontinued without advance notice. Please check with our sales representatives or product engineers before ordering.
2. This datasheet has only typical specifications because there is no space for detailed specifications. Therefore, please approve our product specifications or transact the approval sheet for product specifications before ordering.

14.11.3 Note prior to use

If you apply high static electricity, over rated voltage or reverse voltage to the products, it may cause defects in the products or degrade the reliability.
Please avoid the following items:
(1) over rating power supply, reverse power supply or not-enough connection of 0 V(DC)line
(2) electrostatic discharge by production line and/or operator
(3) electrified product by electrostatic induction
Do not give an excessive mechanical shock.
If you drop the products on the floor, etc., it may occur a crack to the core of inductors and monolithic ceramic capacitors.
Do not give a strong shock such as a drop in handling.

14.12 Transportation

If you transport the products, please pack them so that the package will not be damaged by mechanical vibration or mechanical shock, and please educate and guide a carrier to prevent rough handling.
If you transport the products to overseas (in particular, by sea), it is expected that the transportation environment will be the worst, so please pack the products, in the package designed on the consideration of mechanical strength, vibration-resistant and humidity-resistant .
The package of the products which Murata sells in Japan, may not resist over seas transport .
Please consult us if you are to use the Murata package of the products sold in Japan for transport to overseas.

⚠ Note

1 Murata recommends that customers ensure that the evaluation and testing of these devices are completed with this product actually assembled on their product.

2 Please contact our main sales office or local sales office before using Murata's products for the applications listed below. These applications are known to require especially high reliability for the prevention of defects which might directly cause damage to a third party's life, body or property.

①Aircraft equipment
②Aerospace equipment
③Undersea equipment
④Power plant control equipment
⑤Medical equipment
⑥Transportation equipment (vehicles, trains, ships, etc.)
⑦Traffic signal equipment
⑧Disaster prevention /crime prevention equipment
⑨Data-processing equipment
⑩Application of similar complexity and/or reliability requirements to the applications listed in the above.

This DATA Sheet is indicated in Aug. 2005. The content is subject to change without notice.
Please confirm specifications before ordering. If there are questions regarding the content, please contact our main or local sales office.

⚠ **Note:**

1. This datasheet is downloaded from the website of Murata Manufacturing co., ltd. Therefore, it' s specifications are subject to change or our products in it may be discontinued without advance notice. Please check with our sales representatives or product engineers before ordering.
2. This datasheet has only typical specifications because there is no space for detailed specifications. Therefore, please approve our product specifications or transact the approval sheet for product specifications before ordering.