Chipsmall Limited consists of a professional team with an average of over 10 year of expertise in the distribution of electronic components. Based in Hongkong, we have already established firm and mutual-benefit business relationships with customers from,Europe,America and south Asia,supplying obsolete and hard-to-find components to meet their specific needs.

With the principle of “Quality Parts,Customers Priority,Honest Operation,and Considerate Service”,our business mainly focus on the distribution of electronic components. Line cards we deal with include Microchip,ALPS,ROHM,Xilinx,Pulse,ON,Everlight and Freescale. Main products comprise IC,Modules,Potentiometer,IC Socket,Relay,Connector.Our parts cover such applications as commercial,industrial, and automotives areas.

We are looking forward to setting up business relationship with you and hope to provide you with the best service and solution. Let us make a better world for our industry!

Contact us

Tel: +86-755-8981 8866 Fax: +86-755-8427 6832
Email & Skype: info@chipsmall.com Web: www.chipsmall.com
Address: A1208, Overseas Decoration Building, #122 Zhenhua RD., Futian, Shenzhen, China

Aug.1.2018 Copyright 2018 HIROSE ELECTRIC CO., LTD. All Rights Reserved.
In case that the application demands a high level of reliability, such as automotive,
please contact a company representative for further information.

1 REDRAWING

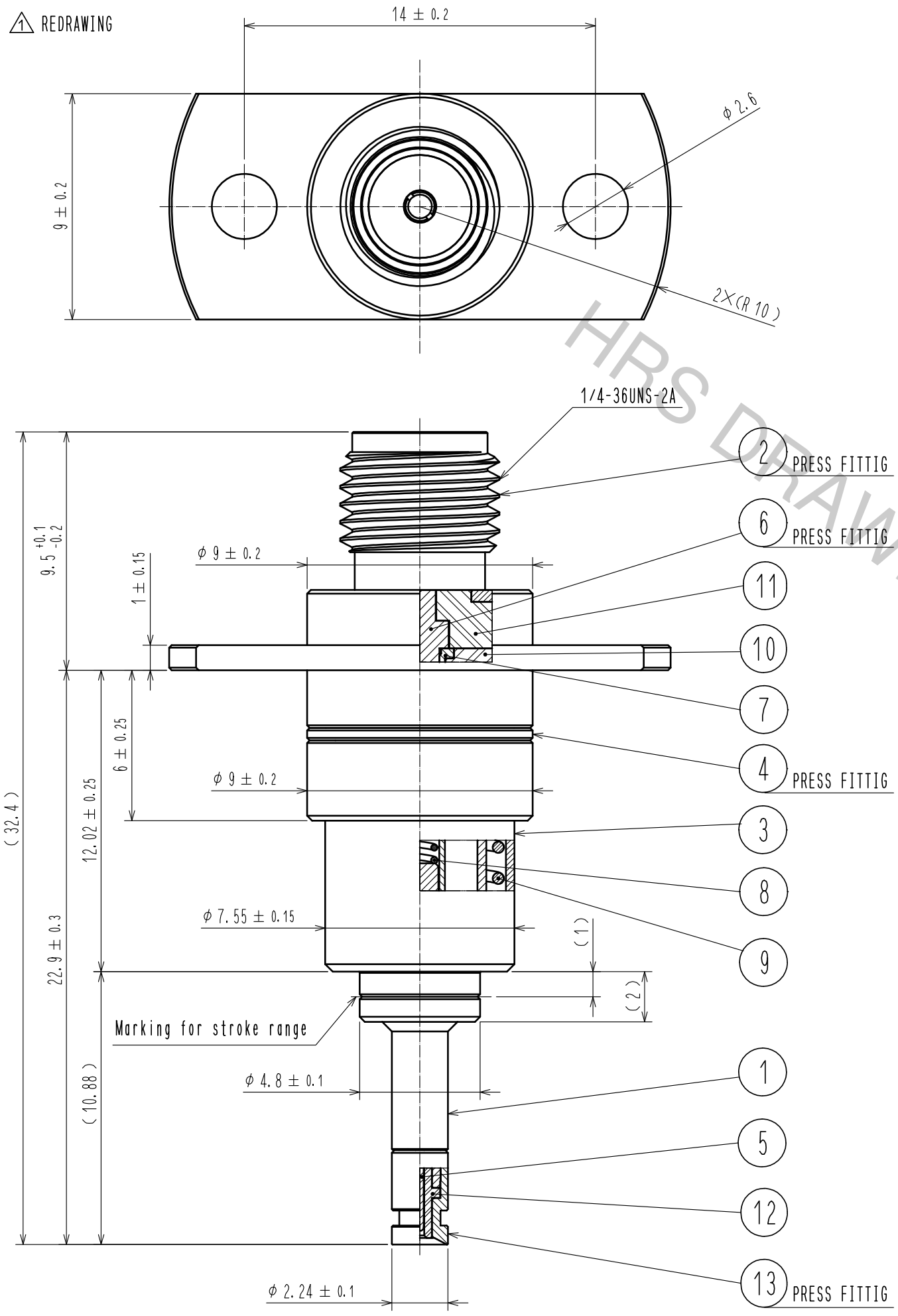

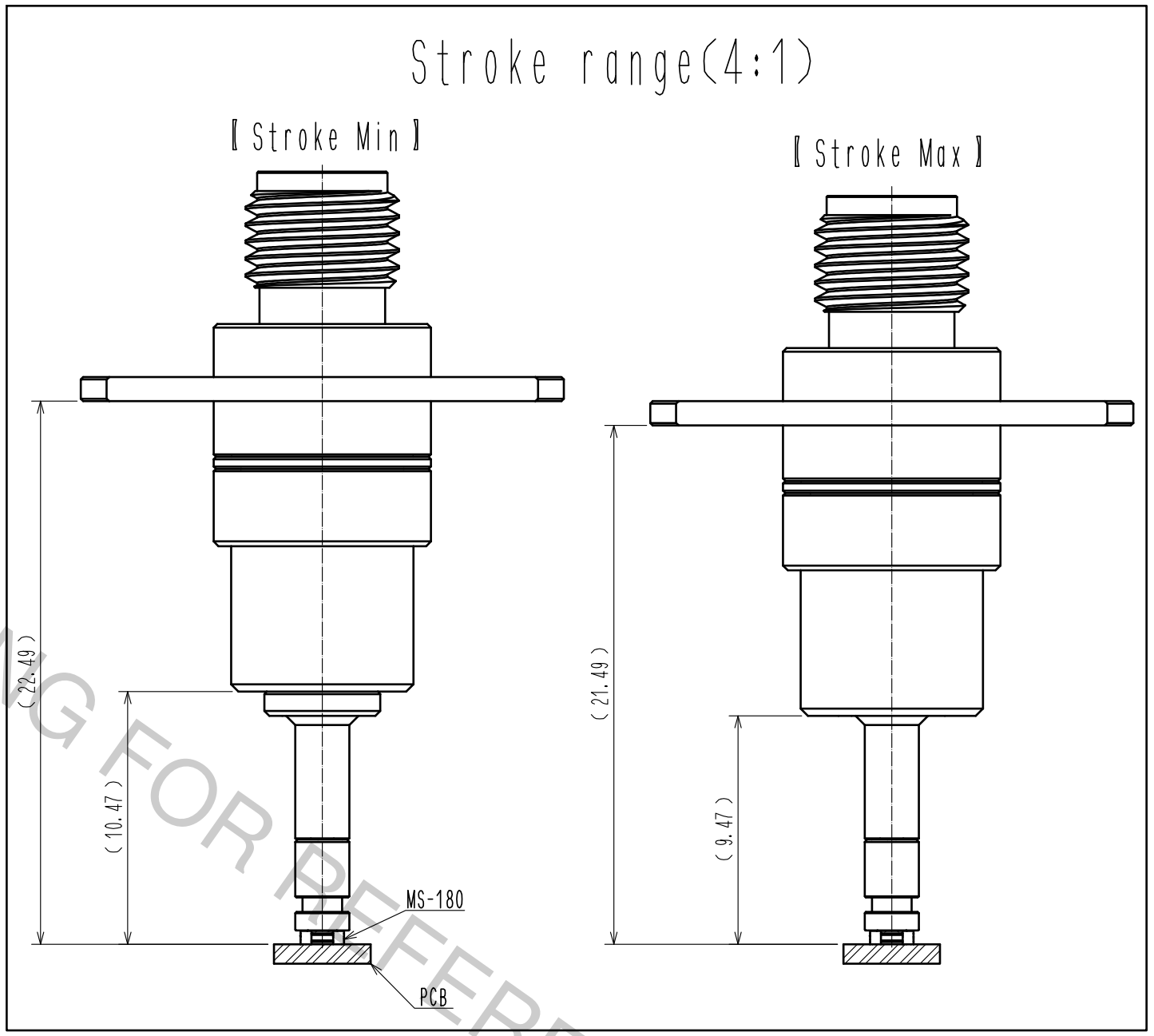

HRS DRAWING FOR REFERENCE

Note 1. Please mate this product (MS-180-HRMJ-F6) vertically to the receptacle (MS-180) within the specified stroke range.

RoHS COMPLIANT

NO.	MATERIAL	FINISH , REMARKS	NO.	MATERIAL	FINISH , REMARKS
7	BERYLLIUM COPPER	GOLD PLATING			
6	BERYLLIUM COPPER	GOLD PLATING	13	STAINLESS STEEL	GOLD PLATING
5	BERYLLIUM COPPER	GOLD PLATING	12	PTFE	
4	BERYLLIUM COPPER	GOLD PLATING	11	PTFE	
3	PHOSPHOR BRONZE	NICKEL PLATING	10	PTFE	
2	STAINLESS STEEL	PASSIVATE	9	PIANO WIRE	GOLD PLATING
1	BERYLLIUM COPPER	GOLD PLATING	8	PIANO WIRE	NICKEL PLATING

UNITS	SCALE		COUNT	DESCRIPTION OF REVISIONS	DESIGNED	CHECKED	DATE
mm	5 : 1	1	1	DIS-D-00000095	RO. FURUYAMA	NK. NINOMIYA	15. 02. 26

HRS HIROSE ELECTRIC CO., LTD.

APPROVED	: KY. SHIMIZU	14. 07. 31	DRAWING NO.	EDC3-354383-00
CHECKED	: NK. NINOMIYA	14. 07. 30	PART NO.	MS-180-HRMJ-F6
DESIGNED	: RO. FURUYAMA	14. 07. 30		
DRAWN	: RO. FURUYAMA	14. 07. 30	CODE NO.	CL358-0346-7-00

1 / 1

FORM HC0011-5-7