Chipsmall Limited consists of a professional team with an average of over 10 year of expertise in the distribution of electronic components. Based in Hongkong, we have already established firm and mutual-benefit business relationships with customers from,Europe,America and south Asia,supplying obsolete and hard-to-find components to meet their specific needs.

With the principle of “Quality Parts,Customers Priority,Honest Operation,and Considerate Service”,our business mainly focus on the distribution of electronic components. Line cards we deal with include Microchip,ALPS,ROHM,Xilinx,Pulse,ON,Everlight and Freescale. Main products comprise IC,Modules,Potentiometer,IC Socket,Relay,Connector.Our parts cover such applications as commercial,industrial, and automotives areas.

We are looking forward to setting up business relationship with you and hope to provide you with the best service and solution. Let us make a better world for our industry!

Contact us

Tel: +86-755-8981 8866 Fax: +86-755-8427 6832
Email & Skype: info@chipsmall.com Web: www.chipsmall.com
Address: A1208, Overseas Decoration Building, #122 Zhenhua RD., Futian, Shenzhen, China

Panasonic

Amplifier-separated Type

Digital Laser Sensor

LS-500 SERIES

CE Conforming to EMC Directive

FDA Conforming to FDA regulations

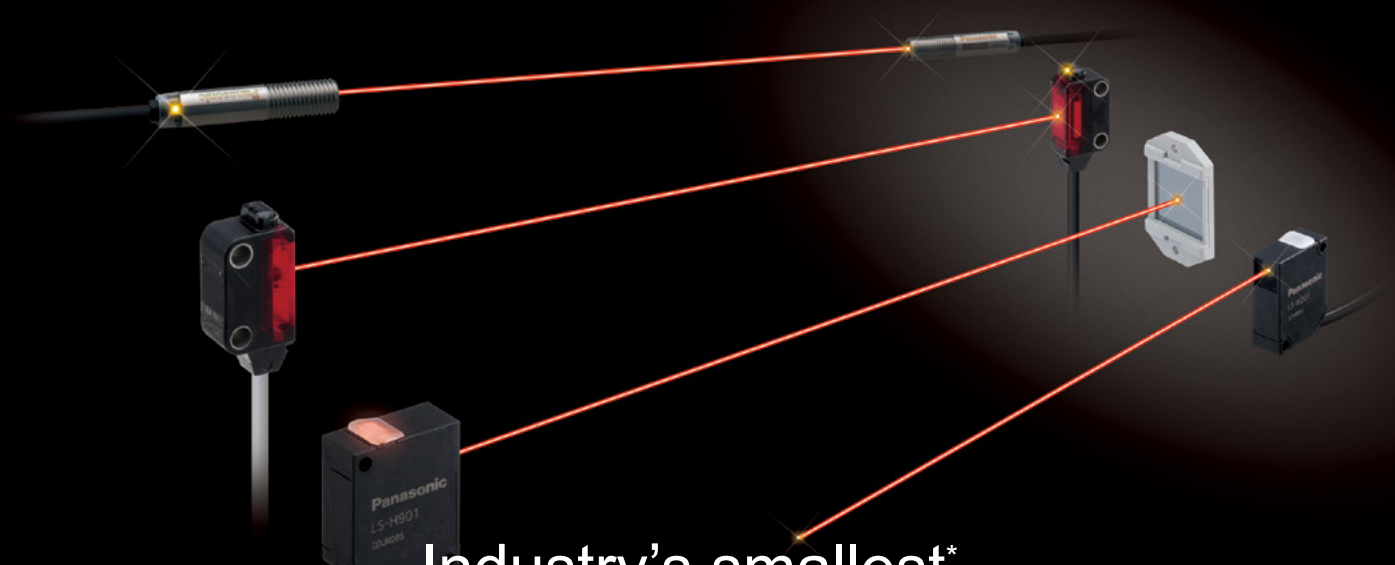

Industry's smallest*

laser sensor head

LASER CLASS 1

Connectable to CC-Link communication unit **SC-GU3-01**

Connectable to DeviceNet communication unit **SC-GU3-02**

Connectable to EtherCAT communication unit **SC-GU3-03**

2016.05 | panasonic.net/id/pidsx/global

* Smallest amplifier-separated type laser sensor head as of September 2014 based on research conducted by our company

Industry's smallest* head

+

Stainless steel (SUS) enclosure

Featuring stainless steel (SUS) enclosure that won't break when bumped during installation or maintenance.

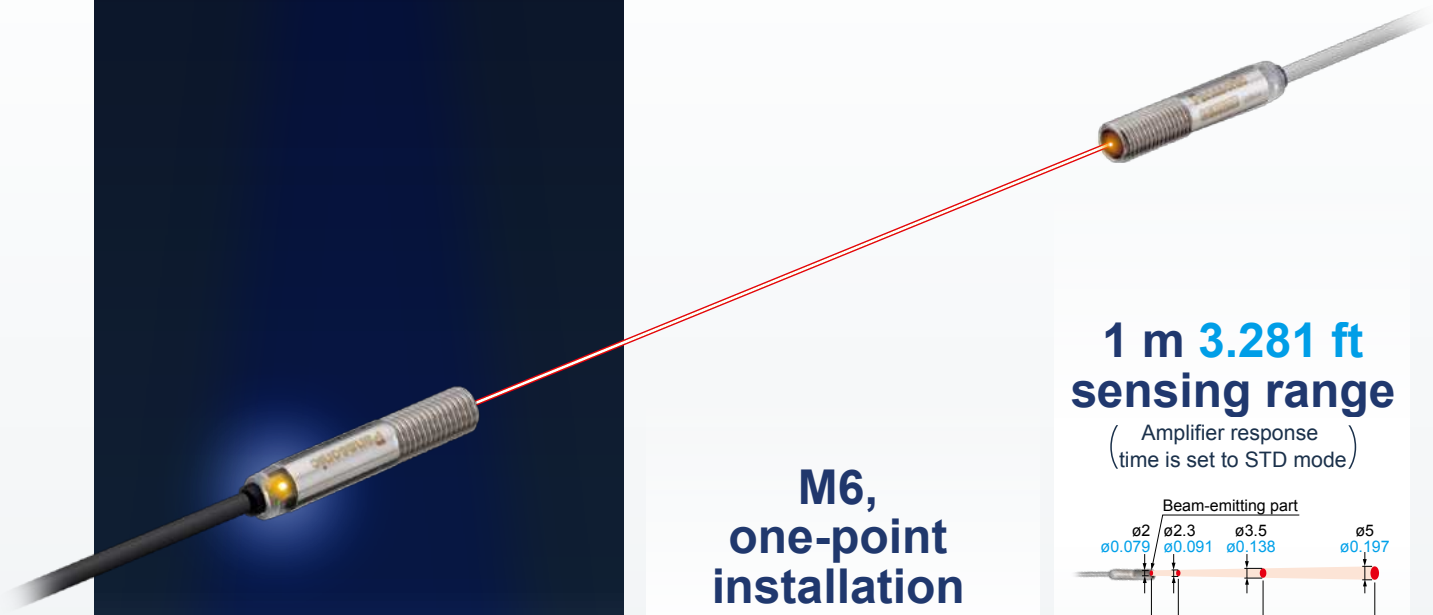

Thru-beam
M6 Cylindrical type

LS-H101

M6, one-point installation

Features an easy-to-install design.

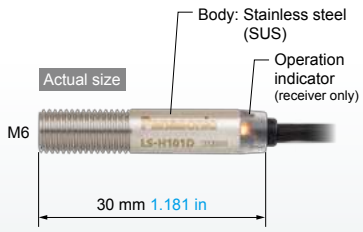

1 m 3.281 ft sensing range

(Amplifier response time is set to STD mode)

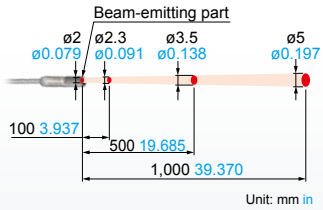

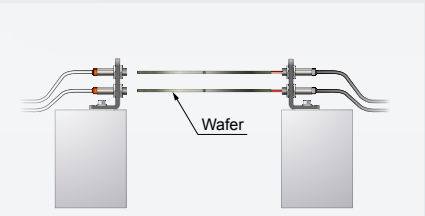

Wafer presence detection

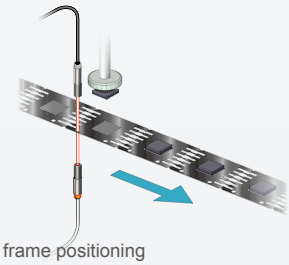

Lead frame positioning

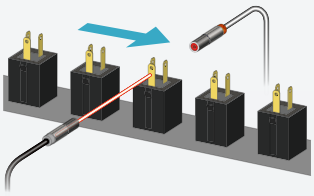

Workpiece orientation detection

* Smallest amplifier-separated type laser sensor head as of September 2014 based on research conducted by our company

Industry's smallest* head

+

IP67

Featuring waterproof IP67 to allow use in the presence of large amounts of water or dust.

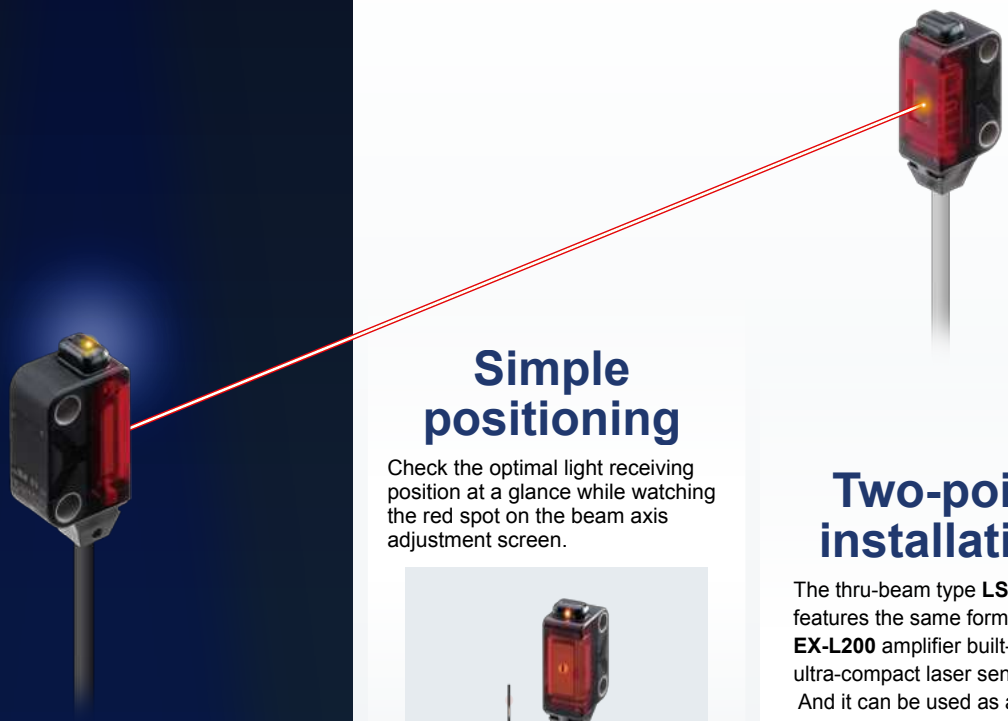

Thru-beam
Square type

LS-H102

Simple positioning

Check the optimal light receiving position at a glance while watching the red spot on the beam axis adjustment screen.

1 m 3.281 ft sensing range

(Amplifier response time is set to STD mode)

Delivers sufficient sensing range for use with 450 mm 17.717 in wafers.

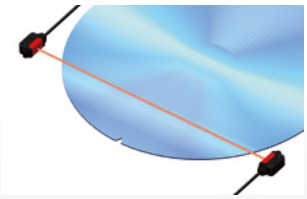

Two-point installation

The thru-beam type **LS-H102** features the same form as the **EX-L200** amplifier built-in ultra-compact laser sensor. And it can be used as an **EX-L200** with a digital indicator.

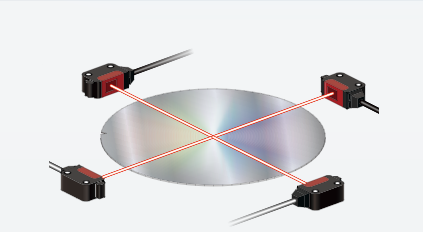

Wafer inclination detection

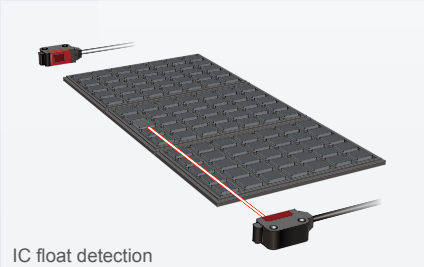

IC float detection

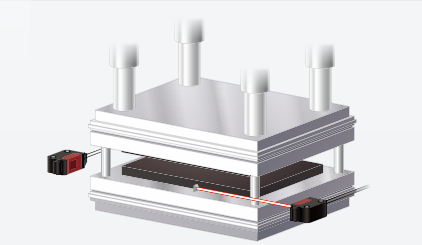

Detection of residual matter inside molds

* Smallest amplifier-separated type laser sensor head as of September 2014 based on research conducted by our company

Industry's smallest* head

+

Thinnest profile

Featuring a 60% smaller design (by volume) **than previous coaxial reflective models, our smallest unit is smaller in every dimension at just W8 × H23 × D18 mm W0.315 × H0.906 × D0.709 in** (excluding indicators).

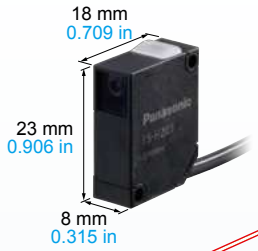

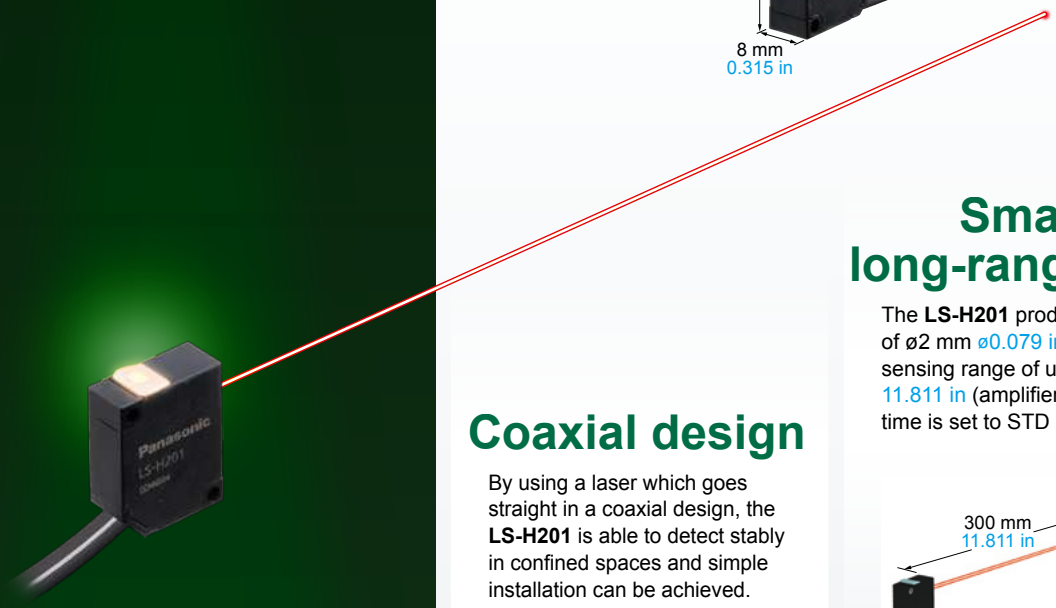

Coaxial reflective type

LS-H201

Coaxial design

By using a laser which goes straight in a coaxial design, the **LS-H201** is able to detect stably in confined spaces and simple installation can be achieved.

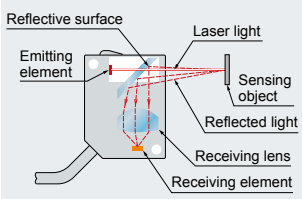

Coaxial principle

Reflective type photoelectric sensor

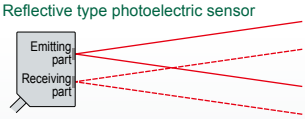

Coaxial reflective type photoelectric sensor

Small, long-range spot

The **LS-H201** produces a spot of ø2 mm ø0.079 in at a sensing range of up to 300 mm 11.811 in (amplifier response time is set to STD mode).

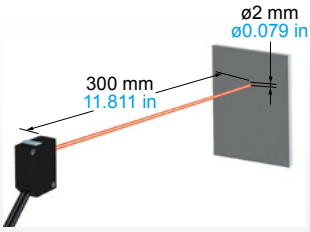

Easy-to-see operation indicator

Visible from all directions.

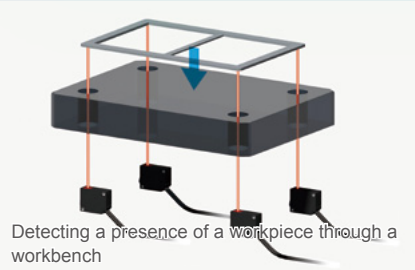

Detecting a presence of a workpiece through a workbench

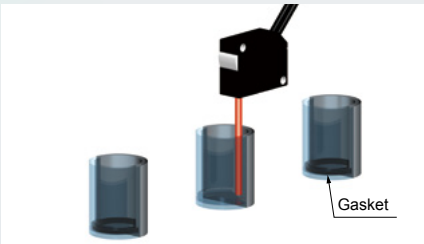

Detecting a gasket in a cap

Detection of threaded holes and thread

* Smallest amplifier-separated type laser sensor head as of September 2014 based on research conducted by our company

Industry's smallest* head

+

Horizontal symmetry

The light source is positioned in the center of the sensor head, which helps to design easier.

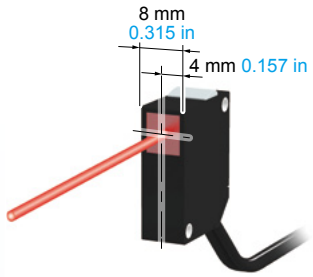

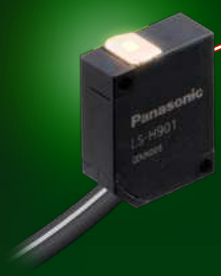

Coaxial retroreflective type

LS-H901

Industry's smallest* and thinnest design

Size just as thin as W8 × H23 (excluding indicators) × D18 mm
W0.315 × H0.906 × D0.709 in.

Sensing range of 10 mm to 1 m 0.394 in to 3.281 ft

(Amplifier response time is set to STD mode)

Good to perform detection at close range.

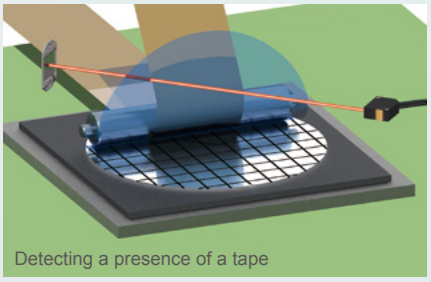
Detecting a presence of a tape

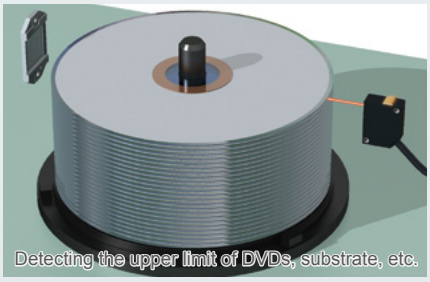
Detecting the upper limit of DVDs, substrate, etc.

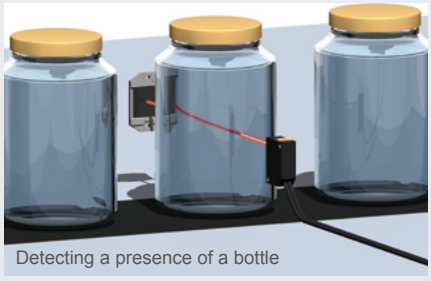
Detecting a presence of a bottle

* Smallest amplifier-separated type laser sensor head as of September 2014 based on research conducted by our company

Among industry's fastest response times* 60 µs

Amplifier

LS-500 series

Enhanced compatibility with fiber sensors in shape and operability. It is easier to select and add laser sensors which have a lot of convenient features in common with fiber sensors.

Increased compatibility with fiber sensors

The **LS-500** series features the same operation, menu displays, and shape.

Detection of beam axis misalignment

Dual outputs (self-diagnosis output)

Light intensity deterioration due to dust accumulation can be notified as an alarm output. Output 2 can be set to self diagnosis output. When the teaching of output 1's threshold value is carried out, output 2 is set concurrently with the setting randomly shifted by the amount of surplus of threshold value.

Stable sensing over the long term

Equipped with the threshold value tracking function. This contributes to maintain stable detection over the long term as well as to reduce maintenance man-hours. In order to track the light amount change due to environmental factors (such as dust accumulation), the incident light intensity can be checked in a certain cycle and threshold value is reset automatically.

Logic operations

Three logic operations (AND, OR, XOR) can be performed with laser sensor only. A dedicated controller is not required and the wire saving and cost reduction are both achieved. Compatible with the **FX-500** series.

Data bank

Eight sets of amplifier settings can be stored in the unit's built-in memory. The ability to save and load settings reduces workload when changing the setup in a multi-model production environment.

* Smallest amplifier-separated type laser sensor head as of September 2014 based on research conducted by our company

■ ORDER GUIDE

Sensor heads

Type		Appearance	Model No.	Sensing range ■: HYPR ■: U-LG ■: LONG ■: STD ■: FAST ■: H-SP
Thru-beam type	Cylindrical	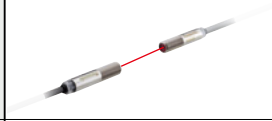	**LS-H101**	1 m 3.281 ft 1 m 3.281 ft 1 m 3.281 ft 1 m 3.281 ft 1 m 3.281 ft 1 m 3.281 ft
	Square	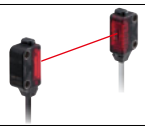	**LS-H102**	1 m 3.281 ft 1 m 3.281 ft 1 m 3.281 ft 1 m 3.281 ft 1 m 3.281 ft 1 m 3.281 ft
Coaxial reflective type			**LS-H201**	750 mm 29.528 in 600 mm 23.622 in 450 mm 17.717 in 300 mm 11.811 in 200 mm 7.874 in 150 mm 5.906 in
Coaxial retroreflective type			**LS-H901**	0.01 to 2.5 m 0.033 to 8.202 ft 0.01 to 2 m 0.033 to 6.562 ft 0.01 to 1.5m 0.033 to 4.921 ft 0.01 to 1m 0.033 to 3.281 ft 0.01 to 1m 0.033 to 3.281 ft 0.01 to 1m 0.033 to 3.281 ft

5 m 16.404 ft cable length type

5 m 16.404 ft cable length types (standard: 2 m 6.562 ft) are available. When ordering this type, add "**-C5**" at the end of the model number.

LS-H101-C5 **LS-H102-C5** **LS-H201-C5** **LS-H901-C5**

Package without reflector

The **LS-H901** is also available without a reflector (**RF-330**).
When ordering this type, add "**-Y**" at the end of the model number.

LS-H901-Y

Amplifiers

Type	Appearance	Model No.	Output	Connection method
Connector type		**LS-501**	NPN open-collector transistor two outputs	Use quick-connection cable (optional)
		LS-501P	PNP open-collector transistor two outputs	
Cable type (With external input)		**LS-501-C2**	NPN open-collector transistor two outputs	2 m 6.562 ft cabtyre cable (6-core) included Cable outer diameter: ø4 mm ø0.157 in
		LS-501P-C2	PNP open-collector transistor two outputs	

Quick-connection cables

Quick-connection cable is not supplied with the connector type amplifier. Please order it separately.

Type	Appearance	Model No.	Description	
Main cable (4-core)	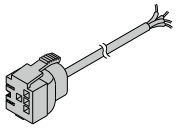	**CN-74-C1**	Length: 1 m 3.281 ft	0.2 mm² 4-core cabtyre cable, with connector on one end Cable outer diameter: ø3.3 mm ø0.130 in
		CN-74-C2	Length: 2 m 6.562 ft	
		CN-74-C5	Length: 5 m 16.404 ft	
Sub cable (2-core)	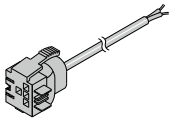	**CN-72-C1**	Length: 1 m 3.281 ft	0.2 mm² 2-core cabtyre cable, with connector on one end Cable outer diameter: ø3.3 mm ø0.130 in Connectable to a main cable up to 15 cables.
		CN-72-C2	Length: 2 m 6.562 ft	
		CN-72-C5	Length: 5 m 16.404 ft	

Connector

Type	Appearance	Model No.	Description
Connector for amplifier		**CN-EP4**	Connector included with sensor head Use for maintenance, for example when another connector is damaged. Five pcs. per set

■ORDER GUIDE

End plates

End plates are not supplied with the amplifier. Please order them separately when the amplifiers are mounted in cascade.

Appearance	Model No.	Description
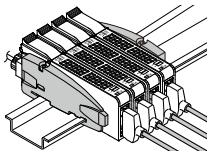	**MS-DIN-E**	When amplifiers are mounted in cascade, or when an amplifier moves depending on the way it is installed on a DIN rail, these end plates clamp amplifiers into place on both sides. Make sure to use end plates when cascading multiple amplifiers together. Two pcs. per set

Accessories

MS-LS-1 (Sensor head mounting bracket)
For **LS-H201□** / **LS-H901□**

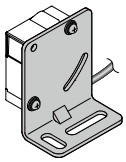

Foot angled mounting

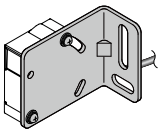

Back angled mounting

Material: Stainless steel (SUS304)
Two M2 (length 12 mm 0.472 in) screws with washers [stainless steel (SUS)] are attached.

RF-330 (Reflector)

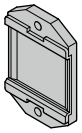

MS-EXL2-2 (Mounting plate for thru-beam type)

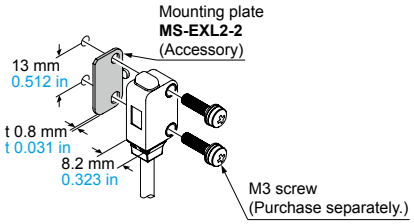

Material: Stainless steel (SUS304)

■OPTIONS

Designation	Model No.	Description	
Sensor head mounting bracket	**MS-EXL2-1**	For **LS-H102□** (square type) Foot angled mounting bracket	
	MS-EXL2-4	For **LS-H102□** (square type) Universal sensor mounting bracket	
	MS-EXL2-5	For **LS-H102□** (square type) Back angled mounting bracket	
Amplifier mounting bracket	**MS-DIN-2**	Mounting bracket for amplifier	
Amplifier protective seal	**FX-MB1**	10 sets of 2 communication window seals and 1 connector seal Communication window seal: It prevents malfunction due to transmission signal from another amplifier, as well as, prevents effect on another amplifier. Connector seal: It prevents contact of any metal, etc., with the pins of the quick-connection cable.	
Reflector	**RF-310**	For coaxial retroreflective type Compact reflector	Sensing range: 0.01 to 1 m 0.033 to 3.281 ft
Reflective tape	**RF-31**	For coaxial retroreflective type Size: 9.2 × 9.2 × t 0.4 mm 0.362 × 0.362 × t 0.016 in	
	RF-33	For coaxial retroreflective type Size: 25.2 × 27.8 × t 0.4 mm 0.992 × 1.094 × t 0.016 in	Sensing range: Same as the **RF-330**.

Sensor head mounting bracket

• **MS-EXL2-1**

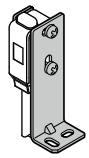

Material: Stainless steel (SUS304)
Two M3 (length 14 mm 0.551 in) screws with washers [stainless steel (SUS)] are attached.

• **MS-EXL2-4**

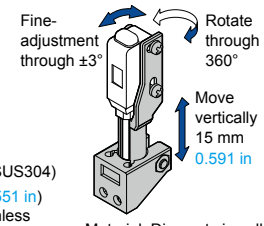

Material: Die-cast zinc alloy
Two M3 (length 14 mm 0.551 in) screws with washers [stainless steel (SUS)], one M3 (length 10 mm 0.394 in) hexagon-socket-head bolt [stainless steel (SUS)], and one M3 hexagon nut [stainless steel (SUS)] are attached.

• **MS-EXL2-5**

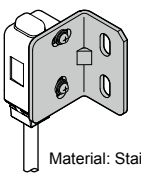

Material: Stainless steel (SUS304)
Two M3 (length 14 mm 0.551 in) screws with washers [stainless steel (SUS)] are attached.

Reflector

• **RF-310**

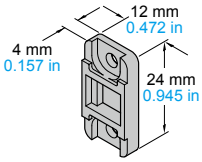

Reflective tape

• **RF-33**

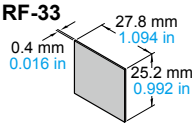

• **RF-31**

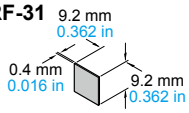

Amplifier mounting bracket

• **MS-DIN-2**

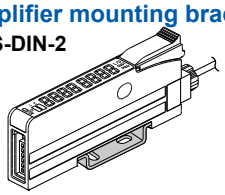

Amplifier protective seal

• **FX-MB1**

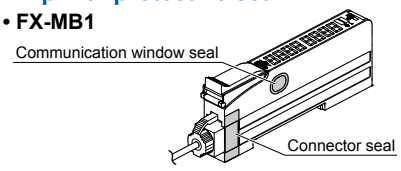

SPECIFICATIONS

Sensor heads

Item	Type	Thru-beam type		Coaxial reflective type	Coaxial retroreflective type
		Cylindrical	Square		
	Model No.	**LS-H101**	**LS-H102**	**LS-H201**	**LS-H901**
Applicable amplifiers		**LS-501**(**P**), **LS-501**(**P**)**-C2** (Note 2)			
Sensing range (Note 3,4)	H−SP	1 m 3.281 ft	1 m 3.281 ft	150 mm 5.906 in	0.01 to 1 m 0.033 to 3.281 ft
	FAST	1 m 3.281 ft	1 m 3.281 ft	200 mm 7.874 in	0.01 to 1 m 0.033 to 3.281 ft
	STD	1 m 3.281 ft	1 m 3.281 ft	300 mm 11.811 in	0.01 to 1 m 0.033 to 3.281 ft
	LONG	1 m 3.281 ft	1 m 3.281 ft	450 mm 17.717 in	0.01 to 1.5 m 0.033 to 4.921 ft
	U−LG	1 m 3.281 ft	1 m 3.281 ft	600 mm 23.622 in	0.01 to 2 m 0.033 to 6.562 ft
	HYPR	1 m 3.281 ft	1 m 3.281 ft	750 mm 29.528 in	0.01 to 2.5 m 0.033 to 8.202 ft
Spot size		Approx. ø5 mm ø0.197 in or less (at a distance from the emitter of 1 m 3.281 ft)	Approx. ø5 mm ø0.197 in or less (at a distance from the emitter of 1 m 3.281 ft)	Approx. ø2 mm ø0.079 in or less (at a distance from the sensor head of 300 mm 11.811 in)	Approx. ø6 mm ø0.236 in or less (at a distance from the sensor head of 1 m 3.281 ft)
Sensing object		Opaque, translucent, or transparent object (Note 5)			
Operation indicator		Orange LED (lights up when the amplifier output is ON)			
Environmental resistance	Protection	IP40 (IEC)	IP67 (IEC)	IP40 (IEC)	IP40 (IEC)
	Ambient temperature	-10 to +55 °C +14 to +131 °F (No dew condensation or icing allowed), Storage: -20 to +70 °C -4 to +158 °F			
	Ambient humidity	35 to 85 % RH, Storage: 35 to 85 % RH			
	Ambient illuminance	Incandescent light: 3,000 ℓx at the light-receiving face			
	Voltage resistance	1,000 V AC for one min. between all supply terminals connected together and enclosure			
	Insulation resistance	20 MΩ, or more, with 250 V DC megger between all supply terminals connected together and enclosure			
	Vibration resistance	10 to 500 Hz frequency, 1.5 mm 0.059 in double amplitude in X, Y and Z directions for two hours each			
	Shock resistance	100 m/s² acceleration (10 G approx.) in X, Y and Z directions three times each			
Emitting element	Type	Red semiconductor laser diode			
	Peak emission wavelength	660 nm 0.026 mil			
	Laser class	Class 1 (IEC / FDA / JIS) (Note 6)			
	Max. output	2 mW	2 mW	2 mW	1 mW
Material		Enclosure: Stainless steel (SUS303) Cover: Polycarbonate	Enclosure: PBT Cover: Acrylic	Enclosure: PBT, Indicator cover: Polycarbonate Beam-emitting / receiving surfaces: Glass	
Cable		0.09 mm² 2-core shielded cable, 2 m 6.562 ft long (Note 7)		0.15 mm², 2-core two parallel shielded cables, 2 m 6.562 ft long (Note 7)	
Weight		Net weight: 50 g approx. Gross weight: 75 g approx.	Net weight: 50 g approx. Gross weight: 70 g approx.	Net weight: 50 g approx. Gross weight: 80 g approx.	Net weight: 50 g approx. Gross weight: 85 g approx.
Accessories		M6 screw: 4 pcs. Toothed lock washer: 2 pcs.	**MS-EXL2-2** (Mounting plate): 2 pcs.	**MS-LS-1** (Mounting bracket): 1pc.	**MS-LS-1** (Mounting bracket): 1pc. **RF-330** (Refrector): 1pc.

Notes: 1) Where measurement conditions have not been specified precisely, the conditions used were an ambient temperature of +23 °C +73.4 °F.
2) When using the thru-beam type **LS-H101**□ or **LS-H102**□, do not set the receiving light sensitivity (gctL) of the applicable **LS-500** series amplifier to level 2 or less. This is because there is a possibility of sensing becoming unstable.
3) The sensing range of the coaxial reflective type sensor is specified for white non-glossy paper (100 × 100 mm 3.937 × 3.937 in) as the object.
4) The sensing ranges for coaxial retroreflective type sensors are values for the **RF-330** reflector. In addition, the sensing range is the possible setting range for the reflector. The sensor can detect an object less than 0.01 m 0.033 ft away. Note that if there are white papers or specular objects near the sensor head, reflected light from these objects may be received. In such cases, use the amplifier unit's receiving sensitivity function to lower the sensitivity, change the response time, or move the sensor head away from the target object. The incident light intensity may vary with the condition of the reflector surface. When using one of the applicable **LS-500** series amplifiers, leave an adequate safety margin when setting the threshold.
5) Make sure to confirm detection with an actual sensor before use.
6) This product complies with 21 CFR 1040.10 and 1040.11 Laser Notice No. 50, dated June 24, 2007, issued by CDRH (Center for Devices and Radiological Health) under the FDA (Food and Drug Administration).
7) Cable cannot be extended.

■SPECIFICATIONS

Amplifiers

Item	Type	Connector type	Cable type
	Model No. NPN output	**LS-501**	**LS-501-C2**
	Model No. PNP output	**LS-501P**	**LS-501P-C2**
Supply voltage		12 to 24 V DC $^{+10}_{-15}$ % Ripple P-P 10 % or less	
Power consumption		Normal operation: 1,200 mW or less (Current consumption 50 mA or less at 24 V supply voltage,Cable type: excluding monitor current output) ECO mode: 980 mW or less (Current consumption 40 mA or less at 24 V supply voltage,Cable type: excluding monitor current output)	
Sensing outputs (Sensing output 1, 2) (Note 4)		<NPN output type> NPN open-collector transistor • Maximum sink current: 50 mA (Note 2) • Applied voltage: 30 V DC or less (between output and 0 V) • Residual voltage: 2 V or less (at max. sink current)	<PNP output type> PNP open-collector transistor • Maximum source current: 50 mA (Note 2) • Applied voltage: 30 V DC or less (between output and +V) • Residual voltage: 2 V or less (at max. source current)
	Output operation	Selectable either Light-ON or Dark-ON	
	Short-circuit protection	Incorporated	
Sensing output setting	Sensing output 1	Normal mode, differential mode, hysteresis mode, window comparator mode, selectable	
	Sensing output 2 (Note 4)	Normal mode, differential mode, hysteresis mode, self-diagnostic output mode, selectable	Normal mode, differential mode, hysteresis mode, self-diagnostic output mode, answer-back output mode, selectable
Response time		H-SP: 60 µs or less, FAST: 150 µs or less, STD: 250 µs or less, LONG: 500 µs or less, U-LG: 5 ms or less, HYPR: 24 ms or less , selectable	
Monitor current output		————	Output current: Approx. 4 to 20 mA (H-SP, FAST, STD: at 0 to 4,000 indication) Response time: 2 ms or less Zero point: 4 mA ± 1 % F.S. Span: 16 mA ± 5 % F.S. Linearity: ± 3 % F.S. Load resistance: 0 to 250 Ω
External input (Note 4)		<NPN output type> NPN non-contact input • Signal condition High: +8 V to +V DC or open, Low: 0 to +2 V DC (source current 0.5 mA or less) • Input impedance: 10 kΩ approx.	<PNP output type> PNP non-contact input • Signal condition High: +4 V to +V DC (sink current 3.0 mA or less), Low: 0 to +0.6 V DC or open • Input impedance: 10 kΩ approx.
External input function		Laser emission halt / teaching (full-auto teaching, limit teaching, 2 point teaching) / logic operation setting / copy lock / display adjustment / data bank load / data bank save, selectable	
Sensing output operation indicator		Orange LED (lights up when sensing output 1 or sensing output 2 is ON)	
Laser emission indicator		Green LED (lights up during laser emission)	
Output select indicator		Yellow LED (lights up when output is selected)	
Digital display		8-digit 7-segment digital display (4-digit green LED + 4-digit red LED), MODE indicator (Yellow LED): L/D, CUST, PRO	
Incident light indication range		H-SP / FAST / STD: 0 to 4,000, LONG / U-LG / HYPR: 0 to 9,999	
Sensitivity setting		2-point teaching / limit teaching / full auto teaching / manual adjustment	
Logical operation		Between sensing output 1 and calculation target: Disabled / AND / OR / XOR, selectable Calculation target: Sensing output 2 / adjacent upstream amplifier (sensing output 1) / external input, selectable	
Timer functions		<Sensing output 1> OFF-delay timer, ON-delay timer, One-shot timer, ON / OFF-delay timer, ON-delay / One-shot timer, switchable either effective of ineffective, with variable timer period	
		<Sensing output 2> OFF-delay timer, ON-delay timer, One-shot timer, switchable either effective of ineffective, with variable timer period	
	Timer period	Timer range “ms”: 0.5 ms approx., 1 to 9,999 ms approx., in approx. 1 ms intervals Timer range “sec”: 0.5 sec. approx., 1 to 32 sec. approx., in approx. 1 sec. intervals Timer range “1/10 ms”: 0.05 ms approx., 0.1 to 999.9 ms approx., in approx. 0.1 ms intervals, Set separately for each output.	
Interference prevention function		Incorporated (Note 3)	
Environmental resistance	Protection	IP40 (IEC)	
	Ambient temperature	-10 to +55°C +14 to +131 °F (If 4 to 7 units are mounted close together, -10 to +50°C +14 to +122 °F; if 8 to 16 units (cable type: 8 to 12 units) are mounted close together, -10 to +45 °C +14 to +113°F) (No dew condensation or icing allowed), Storage: -20 to +70 °C -4 to +158 °F	
	Ambient humidity	35 to 85 % RH, Storage: 35 to 85 % RH	
	Voltage withstandability	1,000 V AC for one min. between all supply terminals connected together and enclosure	
	Insulation resistance	20 MΩ, or more, with 250 V DC megger between all supply terminals connected together and enclosure	
	Vibration resistance	10 to 150 Hz frequency, 0.75 mm 0.030 in (max. 10 G) double amplitude in X, Y and Z directions for two hours each	
	Shock resistance	98 m/s^2 acceleration (10 G approx.) in X, Y and Z directions five times each	
Material		Enclosure: Polycarbonate, Cover: Polycarbonate, Switch: Polyacetal	
Cable		————	0.2 mm^2 6-core cabtyre cable, 2 m 6.562 ft long
Cable extension		Extension up to total 100 m 328.084 ft is possible with 0.3 mm^2, or more, cable.	
Weight		Net weight: 15 g approx., Gross weight: 55 g approx.	Net weight: 75 g approx., Gross weight: 110 g approx.
Accessory		**FX-MB1** (Amplifier protective seal): 1 set	

Notes: 1) Where measurement conditions have not been specified precisely, the conditions used were an ambient temperature of +23 °C +73.4 °F.
2) 25 mA if 5 or more amplifier are connected in cascade (excluding cable extension).
3) Number of units that can be mounted close together: 0 for H-SP; 2 for FAST; 4 for STD, LONG, U-LG, or HYPR
4) Select either sensing output 2 or external input as the connector type.

■ I/O CIRCUIT AND WIRING DIAGRAMS

I/O circuit diagram

NPN output type

Connector type

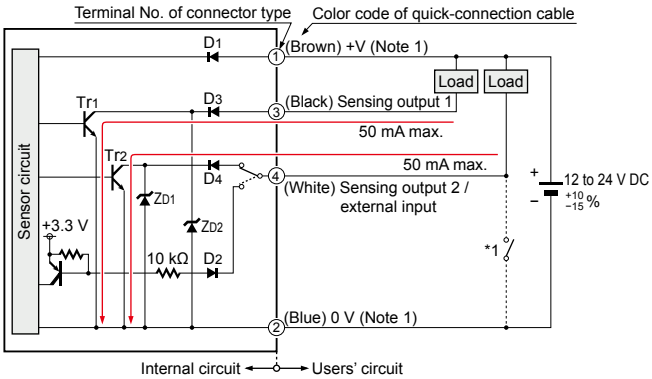

Notes: 1) The quick-connection sub cable does not have +V (brown) and 0 V (blue). The power is supplied from the connector of the main cable.
2) Wiring when sensing output 2 is selected is shown with solid lines. Wiring when external input is selected is shown with broken lines.

Symbols ... D_1, D_2, D_3, D_4: Reverse supply polarity protection diode
Z_{D1}, Z_{D2}: Surge absorption zener diode
Tr_1, Tr_2 : NPN output transistor

Cable type

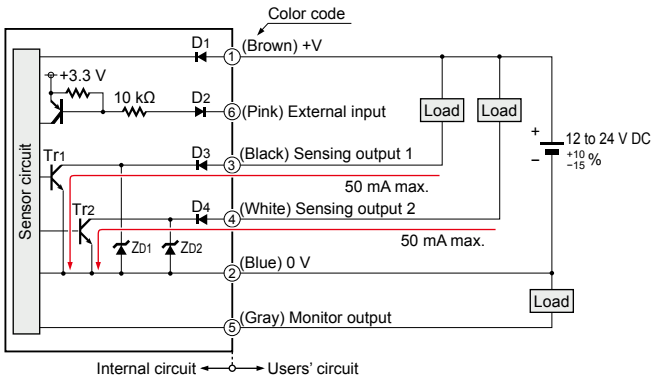

*1

Non-voltage contact or NPN open-collector transistor

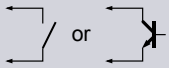

- External input
  High: +8 V to +V, or open
  Low: 0 to +2 V (source current: 0.5 mA or less)
- Light emission halts and teaching occurs when at Low.

PNP output type

Connector type

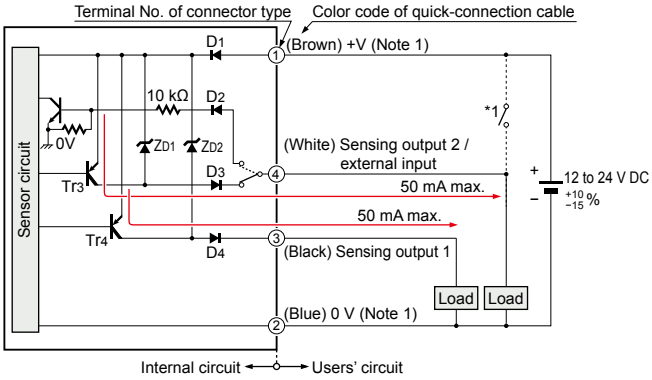

Notes: 1) The quick-connection sub cable does not have +V (brown) and 0 V (blue). The power is supplied from the connector of the main cable.
2) Wiring when sensing output 2 is selected is shown with solid lines. Wiring when external input is selected is shown with broken lines.

Symbols ... D_1, D_2, D_3, D_4: Reverse supply polarity protection diode
Z_{D1}, Z_{D2}: Surge absorption zener diode
Tr_1, Tr_2 : PNP output transistor

Cable type

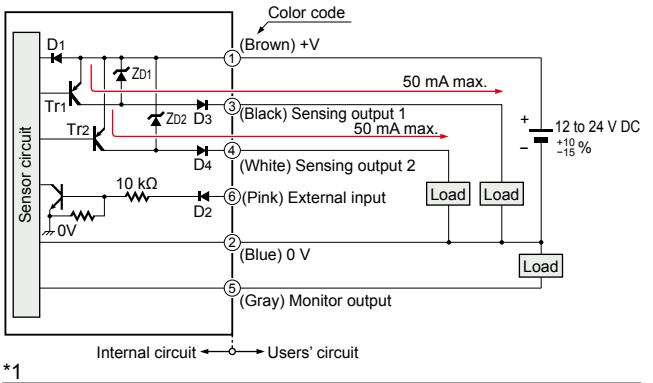

*1

Non-voltage contact or PNP open-collector transistor

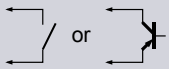

- External input
  High: +4 V to +V (sink current: 3 mA or less)
  Low : 0 to +0.6 V, or open
- Light emission halts and teaching occurs when at High.

Wiring diagram

NPN output type

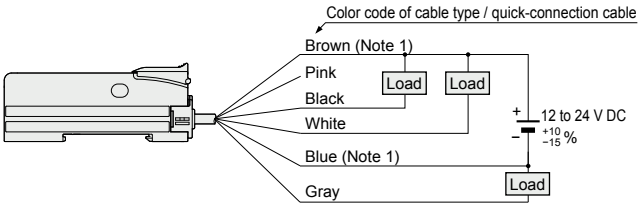

Notes: 1) The quick-connection sub cable does not have brown lead wire and blue lead wire. The power is supplied from the connector of the main cable.
2) The quick-connection cable does not have gray or pink lead wires.

PNP output type

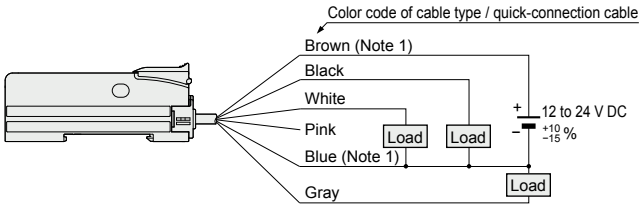

Notes: 1) The quick-connection sub cable does not have brown lead wire and blue lead wire. The power is supplied from the connector of the main cable.
2) The quick-connection cable does not have gray or pink lead wires.

Terminal layout of connector type

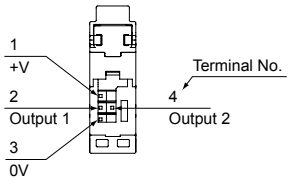

* Connector for amplifier (CN-EP4) pin position

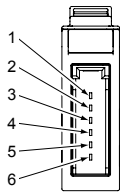

Terminal No.	Connection cable
①	Purple
②	White
③	Shield
④	Shield
⑤	Black
⑥	Pink

■PRECAUTIONS FOR PROPER USE

- This catalog is a guide to select a suitable product. Be sure to read the instruction manual attached to the product prior to its use.

- Never use this product as a sensing device for personnel protection.
- In case of using sensing devices for personnel protection, use products which meet regulations and standards, such as OSHA, ANSI or IEC etc., for personnel protection applicable in each region or country.

Cautions for laser beams

- These products are Class 1 laser in compliance with IEC, JIS and FDA regulations*. To reduce the risk of danger, do not look directly at the laser beam or view it through an optical system.
- A label with instructions as found at the below is affixed to the product. Handle this sensor as per the instruction on the labels.

Certification and identification label　　Warning label

* This product complies with 21 CFR 1040.10 and 1040.11 Laser Notice No. 50, dated June 24, 2007, issued by CDRH (Center for Devices and Radiological Health) under the FDA (Food and Drug Administration).

- The safety standard IEC 60825-1-2007 specifies the use of laser beam products. Please read it carefully before using the laser beam sensor.

Part description (Amplifier)

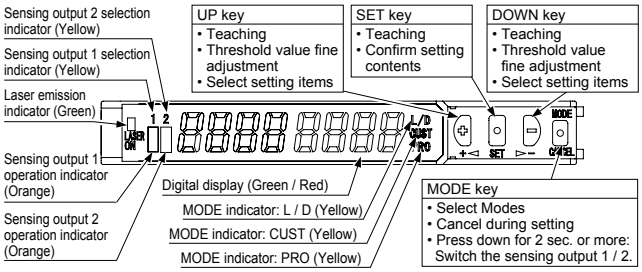

Mounting

Amplifier

<How to mount the amplifier>

(1) Fit the rear part of the mounting section of the amplifier on a 35 mm 1.378 in width DIN rail.
(2) Press down the rear part of the mounting section of the unit on the 35 mm 1.378 in width DIN rail and fit the front part of the mounting section to the DIN rail.

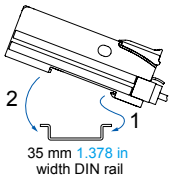

<How to remove the amplifier>

(1) Push the amplifier forward.
(2) Lift up the front part of the amplifier to remove it.

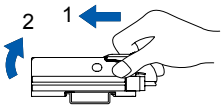

Note: Be careful. If the front part is lifted without pushing the amplifier forward, the hook on the rear portion of the mounting section is likely to break.

<How to mount the sensor head>

(1) Insert the sensor head connector into the inlet until it clicks.
(2) Fit the cover to the connector.

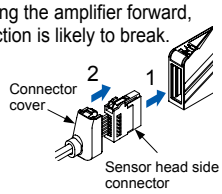

Sensor head

LS-H101□

- The tightening torque should be 0.98 N·m or less.

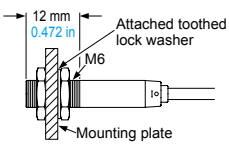

LS-H102□

- In case mounting this product, use a metal plate **MS-EXL2-2** (accessory).
- The tightening torque should be 0.5 N·m or less with M3 screws.

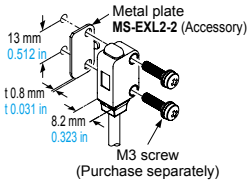

- In case using the dedicated sensor head mounting bracket **MS-EXL2-1** (optional) when mounting this product, the metal plate **MS-EXL2-2** (accessory) is required depending on the mounting direction. Mount as the diagram below indicates.

<Not requiring the metal plate>

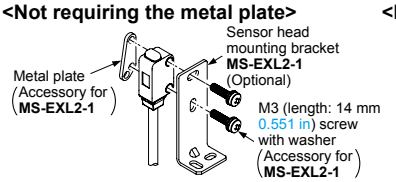

<Requiring the metal plate>

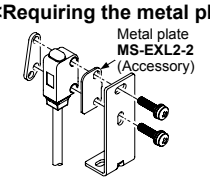

LS-H201□, LS-H901□

- The tightening torque should be 0.5 N·m or less.
- When placing the sensor head horizontally or vertically, the reflector must also be positioned horizontally or vertically as shown in Fig. 1 below.
  If the sensor head is placed horizontally or vertically but the reflector is tilted as shown in Fig. 2 below, the reflection amount will decrease, which may cause unstable detection.

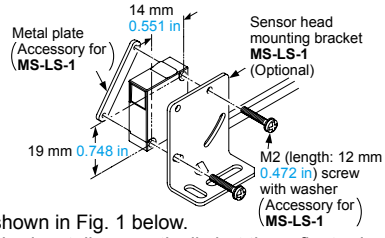

Fig. 1 Proper positioning

When placing the sensor head horizontally or vertically, the reflector shall also be positioned horizontally or vertically.

<Correct>

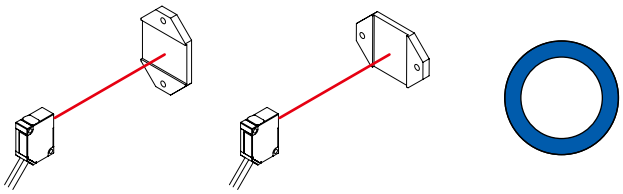

Fig. 2 Improper positioning

When placing the reflector tilted even when the sensor head is positioned horizontally or vertically.

<Incorrect>

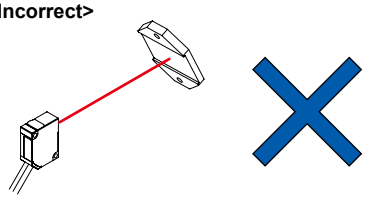

Wiring

- Make sure that the power supply is off while wiring.
- Verify that the supply voltage variation is within the rating.
- Take care that if a voltage exceeding the rated range is applied, or if an AC power supply is directly connected, the sensor may get burnt or damaged.
- If power is supplied from a commercial switching regulator, ensure that the frame ground (F.G.) terminal of the power supply is connected to an actual ground.
- In case noise generating equipment (switching regulator, inverter motor, etc.) is used in the vicinity of this product, connect the frame ground (F.G.) terminal of the equipment to an actual ground.
- Take care that short-circuit or wrong wiring of the load may burn or damage the sensor.
- Do not run the wires together with high-voltage lines or power lines or put them in the same raceway. This can cause malfunction due to induction.
- Ensure that an isolation transformer is utilized for the DC power supply. If an auto transformer is utilized, the main amplifier or power supply may be damaged.
- Make sure to use the optional quick-connection cable for the connection of the amplifier [connector type **LS-501(P)**]. Extension up to total 100 m 328.084 ft is possible with 0.3 mm², or more, cable. However, in order to reduce noise, make the wiring as short as possible. Set the supply voltage after considering the voltage drop caused by the cable's resistance.
  When adding units, wiring length must not exceed 50 m 164.042 ft (for 5 to 8 amplifiers) or 20 m 65.617 ft (for 9 to 16 amplifiers).

■ PRECAUTIONS FOR PROPER USE

Others

- Do not use during the initial transient time (0.5 sec. approx.) after the power supply is switched on.
- Because the sensitivity is higher in U-LG and HYPER modes than in other modes, it can be more easily affected by extraneous noise. Check the operating environment before use.
- This sensor is suitable for indoor use only.
- Avoid dust, dirt, and steam.
- Take care that the product does not come in direct contact with water, oil, grease, or organic solvents, such as, thinner, etc.
- This sensor cannot be used in an environment containing inflammable or explosive gasses.
- Never disassemble or modify the sensor.

■ DIMENSIONS (Unit: mm in)

The CAD data can be downloaded from our website.

LS-H101□ Sensor head

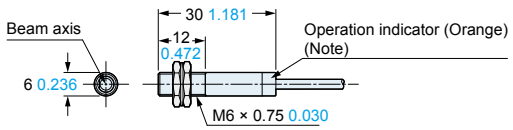

Note: Not incorporated on the emitter.

LS-H102□ Sensor head

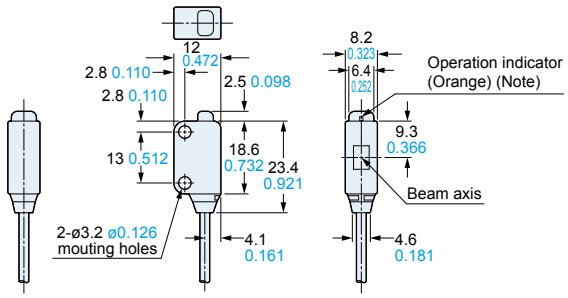

Note: Not incorporated on the emitter.

LS-H201□ LS-H901□ Sensor head

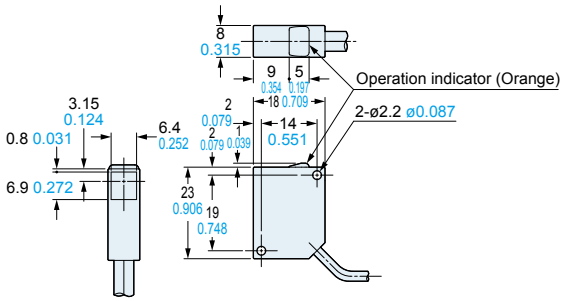

LS-501-C2 LS-501P-C2 Amplifier

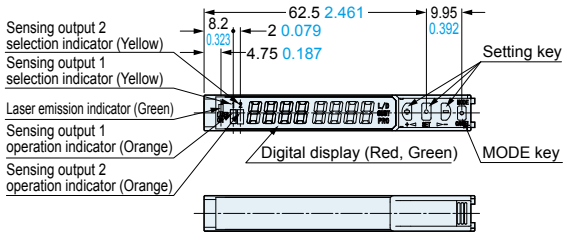

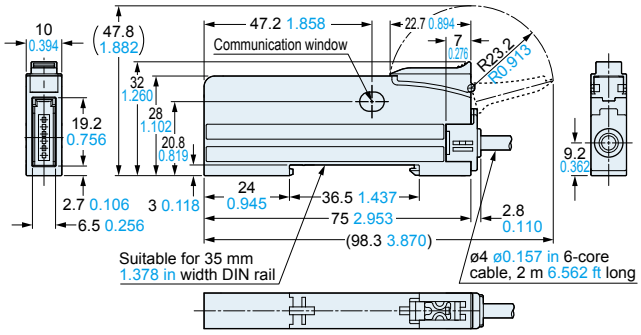

LS-501 LS-501P Amplifier

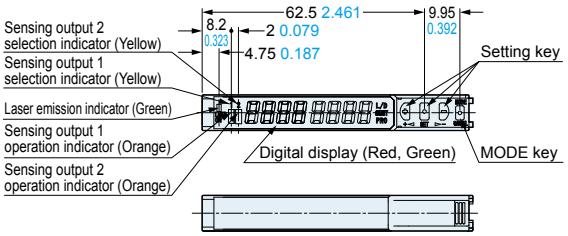

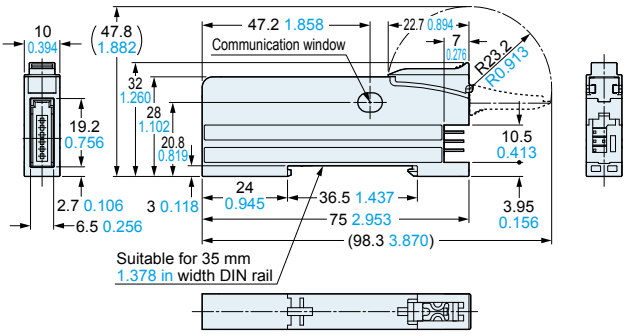

■ DIMENSIONS (Unit: mm in)

The CAD data can be downloaded from our website.

CN-74-C1 CN-74-C2 CN-74-C5 — Main cable (Optional)

• Length (L)

Model No.	Length (mm in)
CN-74-C1	1,000 39.370
CN-74-C2	2,000 78.740
CN-74-C5	5,000 196.850

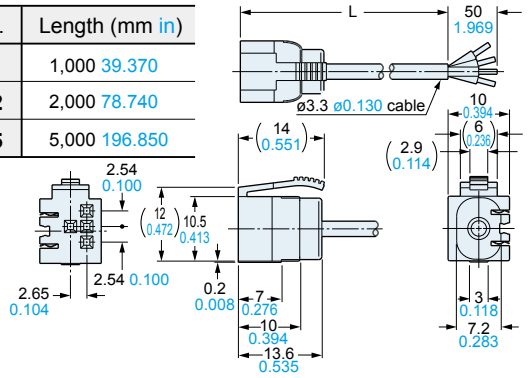

CN-72-C1 CN-72-C2 CN-72-C5 — Sub cable (Optional)

• Length (L)

Model No.	Length (mm in)
CN-72-C1	1,000 39.370
CN-72-C2	2,000 78.740
CN-72-C5	5,000 196.850

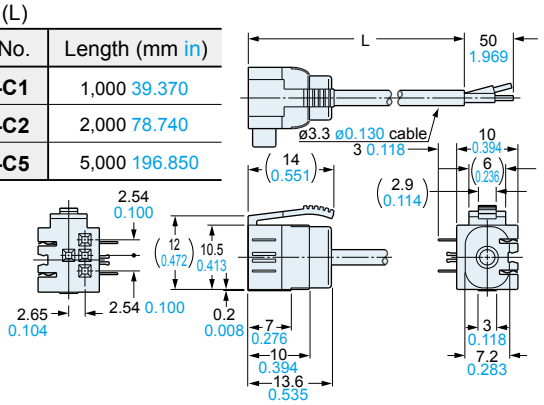

MS-DIN-E — End plate (Optional)

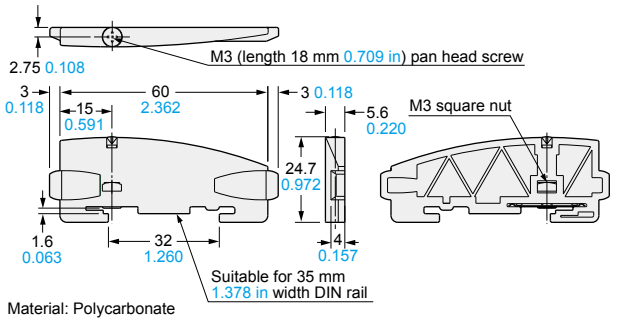

Material: Polycarbonate

RF-330 — Reflector (Accessory for LS-H901□)

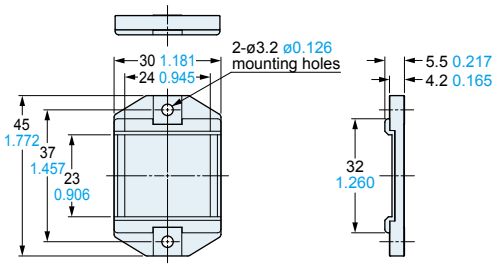

Material: Acrylic (Reflector)
ABS (Base)

RF-310 — Reflector (Optional)

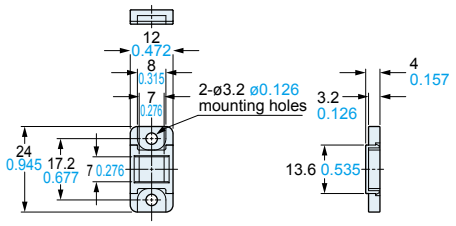

Material: Acrylic (Reflector)
ABS (Base)

RF-33 RF-31 — Reflective tape (Optional)

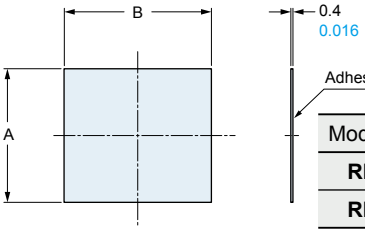

Model No.	A	B
RF-33	25.2 0.992	27.8 1.094
RF-31	9.2 0.362	9.2 0.362

MS-DIN-2 — Amplifier mounting bracket (Optional)

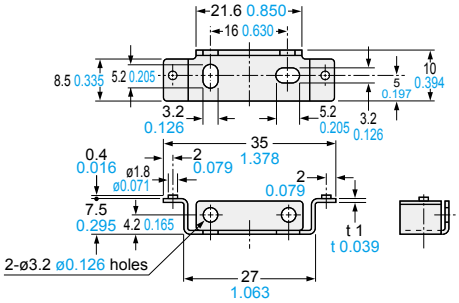

Material: Cold rolled carbon steel (SPCC)
(Uni-chrome plated)

■ DIMENSIONS (Unit: mm in)

The CAD data can be downloaded from our website.

MS-LS-1 — Sensor head mounting bracket (Accessory for LS-H201□, LS-H901□)

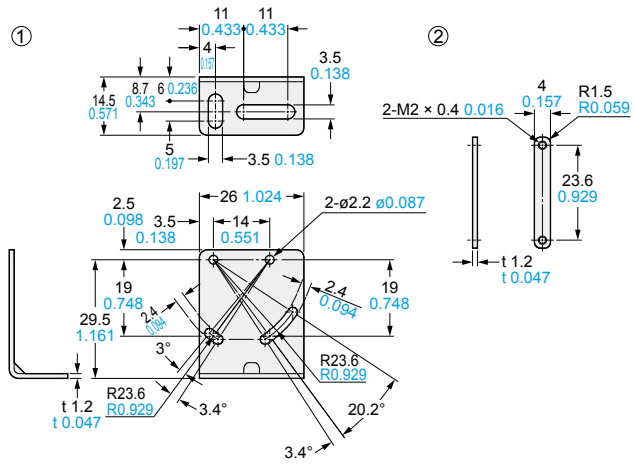

Material: Stainless steel (SUS304)
Two M2 (length 12 mm 0.472 in) screws with washers [stainless steel (SUS)] are attached.

MS-EXL2-1 — Sensor head mounting bracket for LS-H102□ (Optional)

Foot angled mounting bracket

Assembly dimensions
Mounting drawing with the receiver of **LS- H102□**

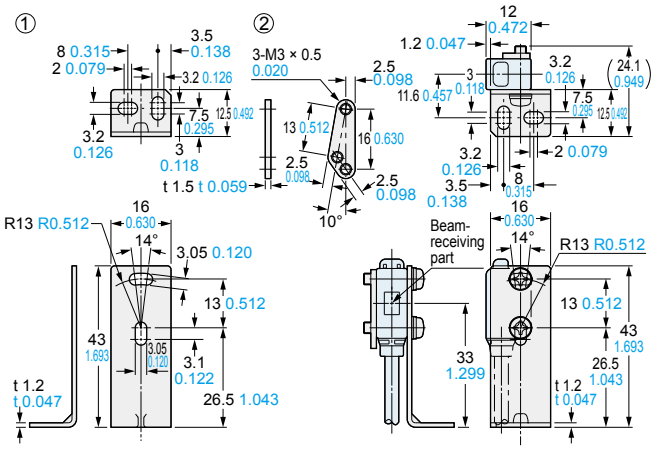

Material: Stainless steel (SUS304)
Two M3 (length 14 mm 0.551 in) screws with washers [stainless steel (SUS)] are attached.

MS-EXL2-2 — Mounting plate (Accessory for LS-H102□)

Assembly dimensions
Mounting drawing with the emitter of **LS- H102□**

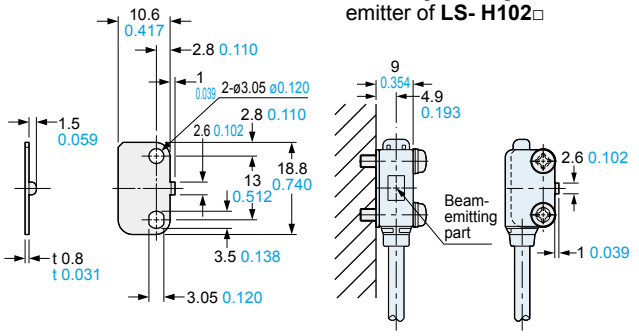

Material: Stainless steel (SUS304)
Note: Screws are not attached. Purchase separately.

Note: Without using the mounting plate, beam misalignment may occur.

MS-EXL2-5 — Sensor head mounting bracket for LS-H102□ (Optional)

Rear mounting bracket

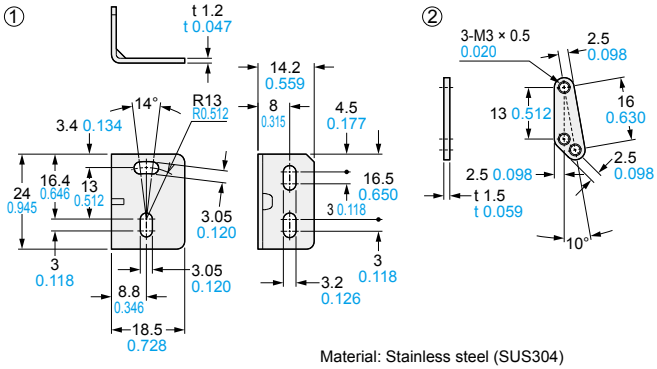

Material: Stainless steel (SUS304)
Two M3 (length 14 mm 0.551 in) screws with washers [stainless steel (SUS)] are attached.

MS-EXL2-4 — Sensor head mounting bracket for LS-H102□ (Optional)

Universal sensor mounting bracket

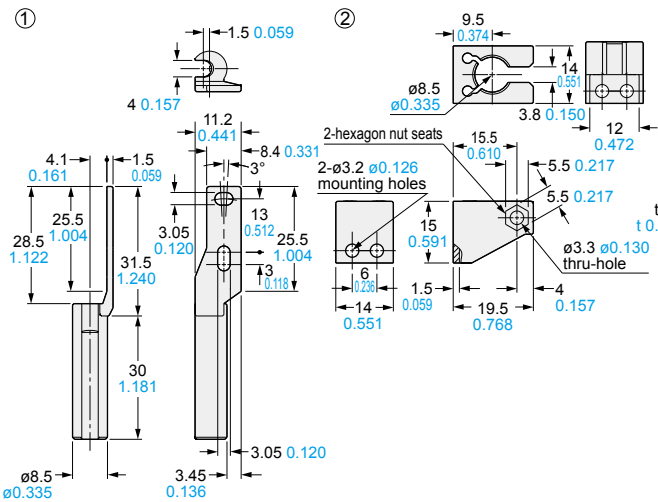

Assembly dimensions
Mounting drawing with the receiver of **LS- H102□**

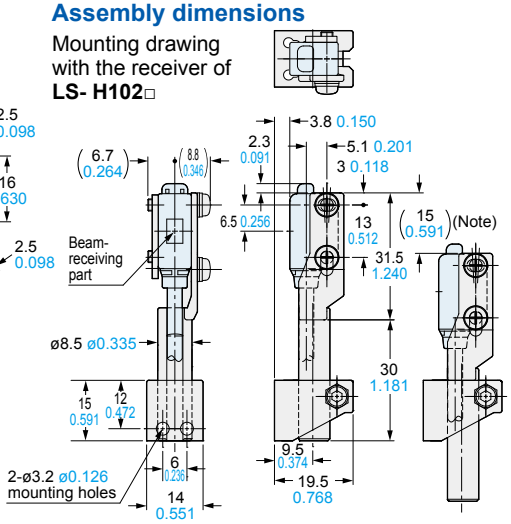

Note: This is the adjustable range of the movable part.

Material: Die-cast zinc alloy
Two M3 (length 14 mm 0.551 in) screws with washers [stainless steel (SUS)], one M3 (length 10 mm 0.394 in) hexagon-socket-head bolt [stainless steel (SUS)], and one M3 hexagon nut [stainless steel (SUS)] are attached.

Related Products

Digital Fiber Sensor
FX-500 SERIES Ver.2

At the industry's leading edge
Featuring superior stability and sharpness

Standard type
FX-501 (P)
Two-output type
FX-502 (P)
Cable type
FX-505 (P)-C2

- **Reduced individual differences**
  Thanks to increased stability of the incident light intensity, units will indicate similar readings, even if the amplifier is replaced.
- **Sharp detection**
  In addition to these sensors' low hysteresis, their hyper beam feature boosts the sensing range.
- **Flat display with a wide field of view**
  The high-brightness, 7-segment display can be seen clearly, even from an angle.

Communication Unit for Open Network
SC-GU3 SERIES

Link digital sensors directly to open networks
3 advantages of the **SC-GU3** series

CC-Link compatible type
SC-GU3-01
DeviceNet compatible type
SC-GU3-02
EtherCAT compatible type
SC-GU3-03

- **Typical compatible models:**

Fiber sensor	**FX-500** series
Laser sensor	**LS-501**, **LS-403**
Pressure sensor	**DPS-400** series

- **High reliability**
  Monitoring of equipment can be done via network, so that actions can be taken correctly and swiftly.
- **Helpful for efficient maintenance work**
  The memory function is useful when replacing sensors.
- **Simple wiring and space-saving**
  Using connectors makes cascade connection simple and eliminates additional work.

Amplifier Built-in Ultra Compact Laser Sensor
EX-L200 SERIES

Built-in amplifier at this size?
Introducing ultra-compact amplifier built-in laser sensor

- **Ultra-compact type**
  Thanks to a dedicated custom IC and a new design, the **EX-L200** is more than 50% smaller by volume than a general-purpose photoelectric sensor.

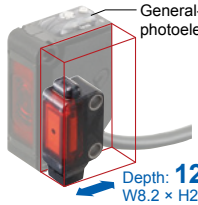

- Laser beam with little dispersion

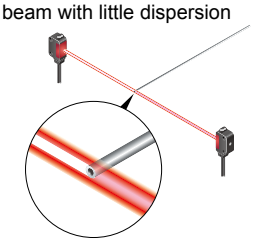

Detection of the tip of a pipe with super-small diameter

Thru-beam
Minute object sensing type

EX-L211 (-P)
Spot size: 6 × 4 mm
0.236 × 0.157 in approx.
(Visual reference value at a distance from the emitter of 1 m 3.281 ft)

1 m
3.281 ft

Spot reflective
Minute object detection type

EX-L221 (-P)
Spot diameter: ø1 mm
ø0.039 in or less
(Visual reference value at a distance from the sensor of 300 mm 11.811 in)

45 to 300 mm
1.772 to 11.811 in

Thru-beam
Long-range sensing type

EX-L212 (-P)
Spot size: 8 × 5.5 mm
0.315 × 0.217 in approx.
(Visual reference value at a distance from the emitter of 1 m 3.281 ft)

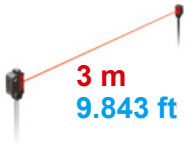

3 m
9.843 ft

Convergent reflective
Spot type

EX-L261 (-P)
Spot diameter: ø1 mm
ø0.039 in or less
(Visual reference value at a distance from the sensor of 50 mm 1.969 in)

20 to 50 mm
0.787 to 1.969 in
(Center: 22 mm 0.866 in)
Value for white non-glossy paper (100 mm 3.937 in square)

Retroreflective
Long-range sensing type

EX-L291 (-P)
Spot size: 6 × 4 mm
0.236 × 0.157 in approx.
(Visual reference value at a distance from the sensor of 1 m 3.281 ft)

4 m
13.123 ft
The value for **RF-330** reflector

Convergent reflective
Line spot type

EX-L262 (-P)
Spot size: 1 × 5 mm
0.039 × 0.197 in approx.
(Visual reference value at a distance from the sensor of 50 mm 1.969 in)

20 to 70 mm
0.787 to 2.756 in
(Center: 22 mm 0.866 in)
Value for white non-glossy paper (100 mm 3.937 in square)

Panasonic Industrial Devices SUNX Co., Ltd.
Global Sales Department
2431-1 Ushiyama-cho, Kasugai-shi, Aichi, 486-0901, Japan
■Telephone: +81-568-33-7861 ■Facsimile: +81-568-33-8591

No. CE-LS500-2-3 May, 2016

All Rights Reserved ©Panasonic Industrial Devices SUNX Co., Ltd. 2016