Chipsmall Limited consists of a professional team with an average of over 10 year of expertise in the distribution of electronic components. Based in Hongkong, we have already established firm and mutual-benefit business relationships with customers from,Europe,America and south Asia,supplying obsolete and hard-to-find components to meet their specific needs.

With the principle of “Quality Parts,Customers Priority,Honest Operation,and Considerate Service”,our business mainly focus on the distribution of electronic components. Line cards we deal with include Microchip,ALPS,ROHM,Xilinx,Pulse,ON,Everlight and Freescale. Main products comprise IC,Modules,Potentiometer,IC Socket,Relay,Connector.Our parts cover such applications as commercial,industrial, and automotives areas.

We are looking forward to setting up business relationship with you and hope to provide you with the best service and solution. Let us make a better world for our industry!

Contact us

Tel: +86-755-8981 8866 Fax: +86-755-8427 6832
Email & Skype: info@chipsmall.com Web: www.chipsmall.com
Address: A1208, Overseas Decoration Building, #122 Zhenhua RD., Futian, Shenzhen, China

ASSY NO.	MS NO.	A +.050 −.060	B THREAD (PLATED) CLASS 2A		C ±.031	D MIN FULL THD	E +.010 −.000	F +.020 −.010	G +.000 −.010	H DIA +.010 −.000	J ±.005	K	L DIA +.004 −.002
		DIMENSIONS											
10-169208-	3102E8S-	.422	.5000-28 UNEF		.484	.391	.562	.672	.297	.375	.594	.875	.120
10-169210-	10S-		.6250-24 NEF							.500	.719	1.000	
10-169211-	10SL-		.6250-24 NEF							.625	.719	1.000	
10-169212-	12S-		.7500-20 UNEF			.450				.625	.812	1.094	
10-169213-	12-	.672	.7500-20 UNEF		.672	.625	.750	.860	.484	.625	.812	1.094	
10-169214-	14S-	.422	.8750-20 UNEF		.484	.450	.562	.672	.297	.750	.906	1.188	
10-169215-	14-	.672	.8750-20 UNEF		.672	.625	.750	.860	.484	.750	.906	1.188	
10-169216-	16S-	.422	1.0000-20 UNEF		.484	.450	.562	.672	.297	.875	.969	1.281	
10-169217-	16-	.672	1.0000-20 UNEF		.672	.625	.750	.860	.484	.875	.969	1.281	
10-169218-	18-	.641	1.1250-18 NEF					.891	.453	1.000	1.062	1.375	
10-169220-	20-		1.2500-18 NEF							1.125	1.156	1.500	
10-169222-	22-		1.3750-18 NEF							1.250	1.250	1.625	
10-169224-	24-	.578	1.5000-18 NEF				.812	.953		1.375	1.375	1.750	.147
10-169228-	28-	.578	1.7500-18 NS				.812	.953		1.625	1.562	2.000	.147
10-169232-	32-	.500	2.0000-18 NS				.875	1.031	.438	1.875	1.750	2.250	.173
10-169236-	36-		2.2500-16 UN							2.062	1.938	2.500	
10-169240-	40-		2.5000-16 UN							2.312	2.188	2.750	

ACCESSORY
(NOT PART OF STANDARD ASSEMBLY)

FLANGE GASKET, PLAIN
10-40450-(SHELL SIZE)

FLANGE GASKET, SHIELDING
10-40450-(SHELL SIZE) S

		WAS	DATE	D MAN	
32	508-157				
1	32525-374	10-69840 (NOTE 6)	6 20 57	BARTKOW	
2	33750-61	ADD NOTE 9 & DATA.	1-21-58	MOORE	
3	35535-8	REV "C" COLUMN	9-2-59	SIEDSMA	
4	36235-4	ADD NOTE 10, REV SOLDER WELL DATA	2-1-60	DONLON	
5	36525-329	REM PD COL (B THD); REV NOTE 3; ADD NOTE 11	3-17-60	LALLI	
A_1	49062-1	(MFG); REM NOTE 10	5-24-69	Randall	Hayes
A_2	49525-635	REV NOTE 11	9-22-69	Randall	Hayes
A_3	51175-1	REM NOTE 9, REVISION LETTER (C) (3 PLCS)	11-13-69	Randall	Hayes
A_4	53249-13	ADD. 9-3895 (PROSPEC); REV STAMP NOTE	1-6-72	Randall	Hayes

5

11. FOR PART NUMBERS 10-169217-13, 10-169218-15, SEE INDIVIDUAL DRAWINGS.

10.

9.

8. SEE WORK ORDER FOR PERMISSIBLE ADDITIONAL OR ALTERNATE STAMPING.

7. INSERTS & CONTACTS ARE NOT REMOVABLE.

6. SEE DRAWINGS 10-169608 THRU 10-169640 & DRAWINGS 10-169808 THRU 10-169840 FOR MATING PLUG ASSEMBLIES.

5. TO COMPLETE ASSEMBLY NUMBER & MS. NO., ADD APPLICABLE INSERT ARRANGEMENT SUFFIX TO BASE NUMBERS LISTED ABOVE. TO DETERMINE DESIRED INSERT ARRANGEMENT, SEE PARTS LISTS 10-169208 THRU 10-169240.

4. INCREASE A DIMENSION BY .312 FOR SIZE "0" CONTACT ONLY.

3. FOR CONTACT SIZE, SPACING & SERVICE RATING, SEE DRAWINGS MS33680 THRU MS33690.

2. DIMENSIONS MUST BE MAINTAINED WHEN INSERTS ARE PRESSED FIRMLY AGAINST INDICATED SHOULDER.

1. THE UNITS ILLUSTRATED MEET THE PERFORMANCE REQUIREMENTS OF MS 3102E PER SPEC MIL-C-5015C.

NOTES: REF SYMBOL

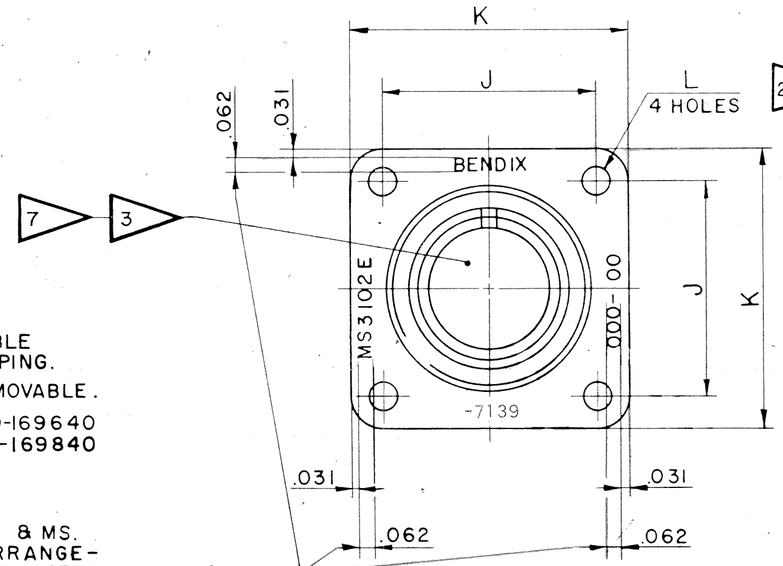

STAMP "BENDIX", DATE CODE(9-3895) & MS NUMBER PER 9-2811
EXAMPLE:
BENDIX-7139
MS 3102E 20-12 S
FOR SUFFIX OTHER THAN "P" OR "S", STAMP PER 9-2437 (SUFFIX OF MS NUMBER ONLY)
EXAMPLE:
MS 3102E 20-12SX
BENDIX-7139

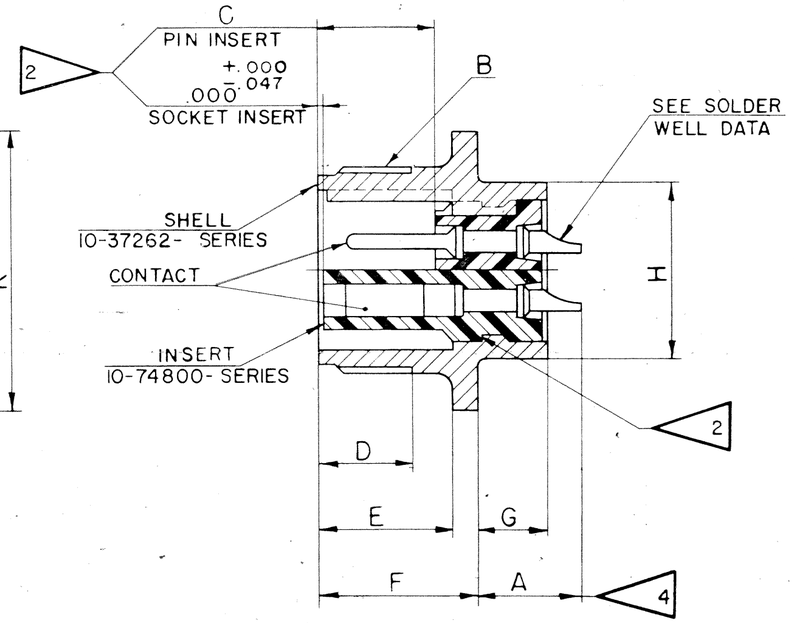

10-169208 THRU 10-169240

USE OF THIS DOCUMENT IS UNLIMITED. DOCUMENTS REFERENCED HEREON CONTAIN LIMITED RIGHTS DATA.

SOLDER WELL DATA

CONTACT SIZE	0	4	8	12	16	16M
WELL DIA	.469 +.005 −.003	.332 +.005 −.003	.209 +.004 −.002	.116 +.004 −.002	.078 +.004 −.002	.078 +.004 −.002
WELL DEPTH +.031 −.000	.625	.625	.500	.375	.188	.250

MATERIAL SPEC.
PROCESS SPEC. TEST 9-3106-1 ASSY 9-3238-1 SEE NOTE 1 9-2437-9-2811 9-3895
HEAT TREAT SPEC.
TOOL ALC. COM. REF. 22569-8

SCINTILLA MAGNETO DIVISION
BENDIX AVIATION CORPORATION
SIDNEY, N.Y. U.S.A.

NAME: CONNECTOR, ELECTRICAL RECEPTACLE, TYPE SG( )FB

D MAN	CHECKER	MAT'L	STS	SR D MAN	APPROVED	SCALE
A. SMEY	Balantine		What	Wagner		NONE
4-24-57	5-9-58			5-16-57	5-16-58	

TOLERANCES UNLESS OTHERWISE SPECIFIED: DECIMALS ±.010

NEXT ASSEMBLY
WEIGHT LBS: SEE PARTS LIST
SUPERSEDES
SUPERSEDED BY: —
AND IS NOT INTERCHANGEABLE
REF 10-69208/40

10-169208 THRU 10-169240

DWG SIZE C
TAB CODE 77820