Chipsmall Limited consists of a professional team with an average of over 10 year of expertise in the distribution of electronic components. Based in Hongkong, we have already established firm and mutual-benefit business relationships with customers from,Europe,America and south Asia,supplying obsolete and hard-to-find components to meet their specific needs.

With the principle of “Quality Parts,Customers Priority,Honest Operation,and Considerate Service”,our business mainly focus on the distribution of electronic components. Line cards we deal with include Microchip,ALPS,ROHM,Xilinx,Pulse,ON,Everlight and Freescale. Main products comprise IC,Modules,Potentiometer,IC Socket,Relay,Connector.Our parts cover such applications as commercial,industrial, and automotives areas.

We are looking forward to setting up business relationship with you and hope to provide you with the best service and solution. Let us make a better world for our industry!

Contact us

Tel: +86-755-8981 8866 Fax: +86-755-8427 6832
Email & Skype: info@chipsmall.com Web: www.chipsmall.com
Address: A1208, Overseas Decoration Building, #122 Zhenhua RD., Futian, Shenzhen, China

DWG. SIZE	DWG. NO.
D	031–8377

REVISIONS			
SYM.	E.C.N.	DATE	APVD.

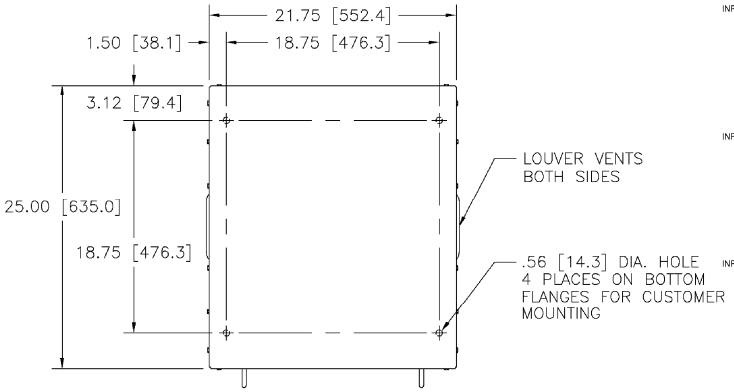

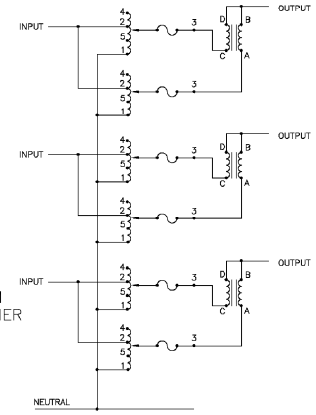

SCHEMATIC

CONTROLS:

MICROTERMINAL: THE TERMINAL IS PROVIDED FOR LOCAL CONTROL OF THE UNIT WITH AN LCD DISPLAY FOR OUTPUT VOLTAGE READINGS. SEE THE MP USER'S HANDBOOK (FORM #003–1622) FOR DETAILED INFORMATION.

CONTROLLER ON/OFF SWITCH: THIS SWITCH TURNS OFF POWER TO THE MICROPROCESSOR CONTROLLER ONLY.

MOTOR ON/OFF SWITCH: THIS SWITCH TURNS OFF POWER FROM THE MICROPROCESSOR TO EACH OF THE AUTOTRANSFORMER MOTORS.

RAISE/LOWER SWITCHES: THESE SWITCHES ARE LOCATED INTERNALLY AND ARE ACCESSIBLE FROM THE FRONT VIA THE REMOVABLE ACCESS PANEL. THE SWITCHES ALLOW FOR EACH PHASE OF THE REGULATOR TO BE MANUALLY CONTROLLED INDIVIDUALLY.

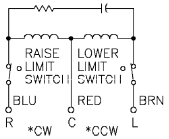

MOTOR CIRCUIT
120V, 50/60 HZ
* ROTATION AS VIEWED FROM TOP END
MOTOR SPEEDS: SEE CHART

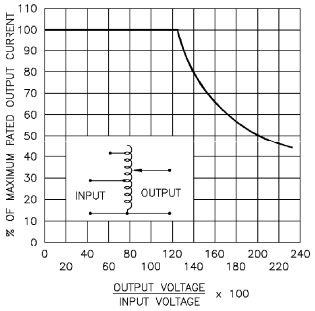

FIGURE A

MAXIMUM OUTPUT CURRENT OF ANY DUAL INPUT VOLTAGE OR VOLTAGE DOUBLER UNIT OPERATED AT LOWER INPUT VOLTAGE.

* MAXIMUM OUTPUT CURRENT IN OUTPUT VOLTAGE RANGE FROM 0 TO 25 PERCENT ABOVE LINE VOLTAGE. AT HIGHER OUTPUT VOLTAGES, OUTPUT CURRENT MUST BE REDUCED ACCORDING TO RATING CURVE (SEE FIGURE A).

++ MAXIMUM KVA AT MAXIMUM OUTPUT AND CORRESPONDING DE–RATED CURRENT. MAXIMUM KVA AT LOWER OUTPUT VOLTAGES MAY BE CALCULATED FROM RATING CURVE, (SEE FIGURE A).

V.D. = VOLTAGE DOUBLER.

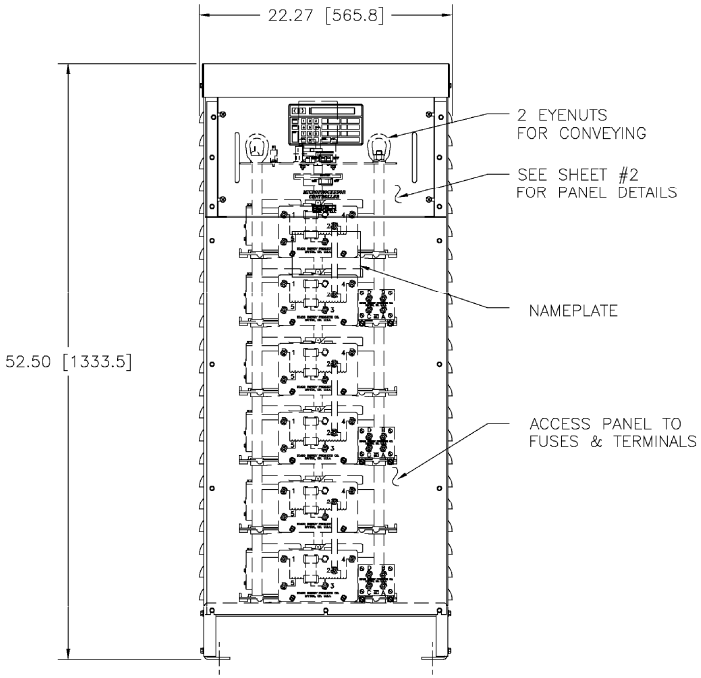

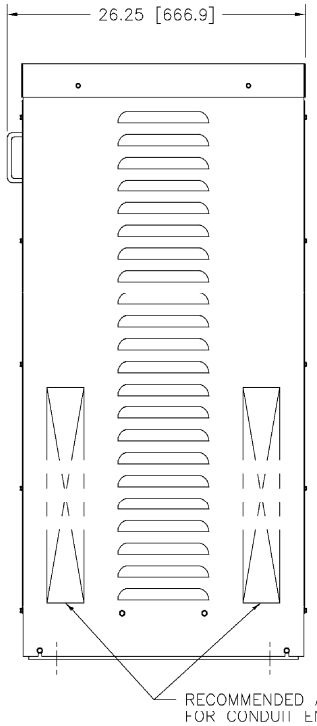

SPEED (SECONDS)	MODEL NUMBER
15	MV15M5021E–6Y
30	MV30M5021E–6Y
60	MV60M5021E–6Y

WIRING	SPECIFICATIONS						TERMINAL CONNECTIONS		
	INPUT		OUTPUT			SHAFT ROTATION FOR INCREASE VOLTAGE	FOR INCREASING VOLTAGE AS VIEWED FROM ROTOR END		
	VOLTS	HERTZ	VOLTS	MAX. AMPS	MAX. KVA		INPUT	JUMPER	OUTPUT
THREE PHASE WYE	480	50/60	0–480	56	46.6	CW	4–4–4	——	B–B–B
		60	0–560	56	54.3	CW	2–2–2	——	B–B–B
	240	60	0–560	56–24 V.D.	23.5++	CW	5–5–5		B–B–B

UNLESS OTHERWISE SPECIFIED, TOLERANCE IS ± DECIMALS .XX ±.010 .XXX ±.005 HOLES ±.03 ANGLES 1° DRAFT 1–1/2°
UNITS in [mm]
ALL DIMENSIONS APPLY AFTER PLATING
MATERIAL:

TITLE: SPEC. CONTROL DRAWING MOTORIZED VARIABLE XFMR. MVM5021E–6Y

STACO ENERGY PRODUCTS CO. A COMPONENTS CORPORATION OF AMERICA COMPANY DAYTON, OHIO U.S.A.

The information and design disclosed herein was originated by and is the property of STACO ENERGY PRODUCTS CO. Unauthorized use and disclosure prohibited. Reproduction, distribution or use for any purpose other than that expressly granted by contract is prohibited. Rights in any article disclosed therein except for the patent rights are expressly granted to others. The foregoing does not apply to vendor proprietary parts.

DRAWN BY	DATE	FIRST USED ON	DO NOT SCALE DWG.	CUSTOMER APPROVAL	DATE
TIM RAU	3/10/97				
CHECKER	DATE	WEIGHT APPROX.	CODE IDENT. NO. 95006		
ENGINEER	DATE	SCALE .2=1	SHEET 1 OF 2	DWG. SIZE D	DWG. NO. 031–8377