Chipsmall Limited consists of a professional team with an average of over 10 year of expertise in the distribution of electronic components. Based in Hongkong, we have already established firm and mutual-benefit business relationships with customers from,Europe,America and south Asia,supplying obsolete and hard-to-find components to meet their specific needs.

With the principle of “Quality Parts,Customers Priority,Honest Operation,and Considerate Service”,our business mainly focus on the distribution of electronic components. Line cards we deal with include Microchip,ALPS,ROHM,Xilinx,Pulse,ON,Everlight and Freescale. Main products comprise IC,Modules,Potentiometer,IC Socket,Relay,Connector.Our parts cover such applications as commercial,industrial, and automotives areas.

We are looking forward to setting up business relationship with you and hope to provide you with the best service and solution. Let us make a better world for our industry!

Contact us

Tel: +86-755-8981 8866 Fax: +86-755-8427 6832
Email & Skype: info@chipsmall.com Web: www.chipsmall.com
Address: A1208, Overseas Decoration Building, #122 Zhenhua RD., Futian, Shenzhen, China

Ultra-slim Body Picking Sensor

NA1-PK5 SERIES NA1-5 SERIES

Related Information
■ General terms and conditions..... F-7
■ Sensor selection guide ..... P.461~
■ Glossary of terms..... P.1455~
■ General precautions ..... P.1458~

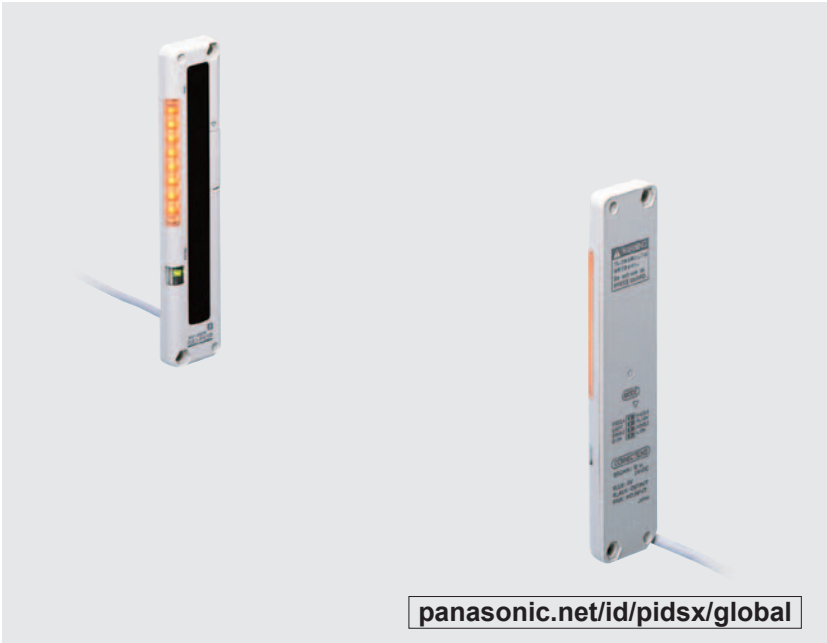

Conforming to EMC Directive

Recognition

Make sure to use light curtains when using a sensing device for personnel protection.
Refer to p.495~ for details of light curtains.

PNP output type available

Interference prevention

Even a slim hand is detectable by the 25 mm 0.984 in pitch beam area sensor

10 mm 0.394 in thick: half the thickness of conventional models

Space saving is now possible. The ultra-thin design does not obstruct picking operation.

Cable can be freely arranged in any position

Clearly visible job indicators

Bright, easy-to-see job indicators, 55 mm 2.165 in in length, have been incorporated into both the emitter and the receiver.
This sensor is optimal for picking. With the **NA1-PK5**, we've enhanced visibility even further by using 8 orange LED lights.

BASIC PERFORMANCE

Long sensing range: 3 m 9.843 ft NA1-5

Its long sensing range of 3 m 9.843 ft is sufficient for confirming access to a parts shelf.

FUNCTIONS

Two unit installation is possible

Sensor units can now be set to different light emission frequencies in order to prevent mutual interference.
Two units can now be operated in a side-by-side configuration without interference, for problem-free detection over wider areas.

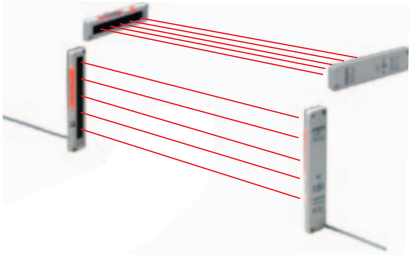

APPLICATIONS

Preventing wrong parts picking

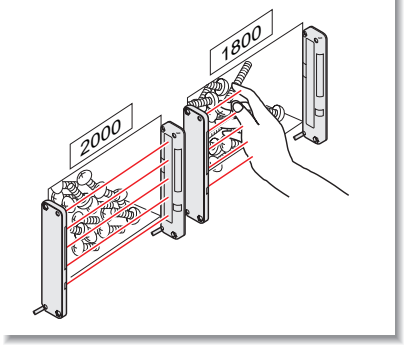

Detecting parts having wide positioning area

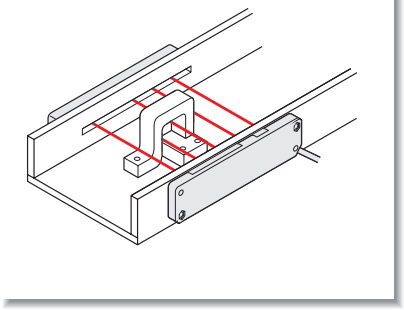

WARNING Never use this product in any personnel safety application.

FUNCTIONS

Lighting pattern selectable

The job indicator operation can be selected as either continuous lighting or blinking.

Continuous lighting

Blinking

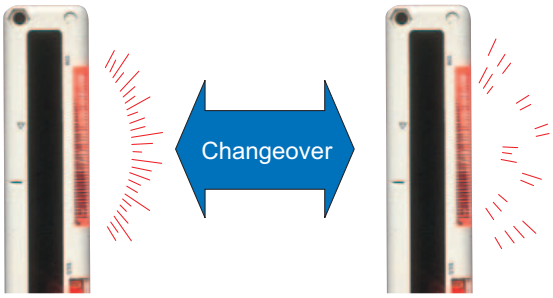

Selectable detection operation

Either of the two different detection operations may be selected in order to suit the particular application. Sensor units can be set to detect the interruption of 1 or more beam channels, or can be set to detect only the interruption of 2 or more beam channels.

Single beam interruption

Double beam interruption

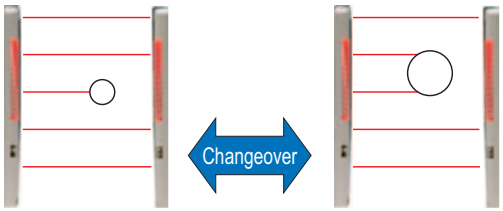

All opaque bodies with ø35 mm ø1.378 in or greater will be detected.

The accidental passage of small objects through the beam axis will not trigger detection, yet the operator's hands will always be accurately detected. This function is also useful when small objects regularly interrupt the beam axis.

ORDER GUIDE

Type	Appearance	Sensing range (Note)	Model No.	Output
High-luminous job indicator type	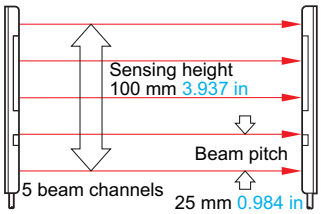	0.1 to 1.2 m 0.328 to 3.937 ft (0.05 to 0.5 m 0.164 to 1.640 ft when set to SHORT.)	**NA1-PK5**	NPN open-collector transistor
			NA1-PK5-PN	PNP open-collector transistor
Long sensing range type		0.2 to 3 m 0.656 to 9.843 ft (0.05 to 1 m 0.164 to 3.281 ft when set to SHORT.)	**NA1-5**	NPN open-collector transistor
			NA1-5-PN	PNP open-collector transistor

Notes: 1) The sensing range is the possible setting distance between the emitter and the receiver.
2) The model No. with "**P**" shown on the label affixed to the product is the emitter, "**D**" shown on the label is receiver.

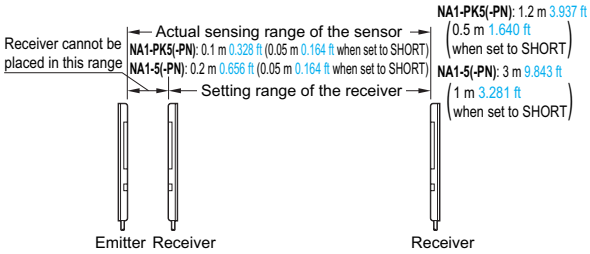

ORDER GUIDE

5 m 16.404 ft cable length type

5 m 16.404 ft cable length type (standard: 2 m 6.562 ft) is also available.
Model No.: **NA1-5-C5**

Pigtailed type

Pigtailed type is also available. When ordering this type, suffix "**-J**" to the model No.
Please order the mating cable separately.
(e.g.) Pigtailed type of **NA1-PK5-PN** is "**NA1-PK5-PN-J**".

• Mating cable (2 cables are required.)

Model No.	Description
CN-24-C2	4-core, cable length 2 m 6.562 ft
CN-24-C5	4-core, cable length 5 m 16.404 ft

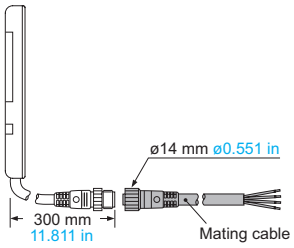

S-LINK direct hook-up picking sensor

SL-N15 can be hooked up to the sensor & wire-saving link system **S-LINK**.
Refer to p.1033~ for the sensor & wire-saving link system **S-LINK**.

Model No.	Description	
SL-N15	Sensing range: 0.2 to 3 m 0.656 to 9.843 ft (0.05 to 1 m 0.164 to 3.281 ft when the switch is set to SHORT) Beam pitch: 25 mm 0.984 in Sensing height: 100 mm 3.937 in Sensing object: ø35 mm ø1.378 in or more opaque object	It is a parts-taking verification sensor with five sensing beams and can be hooked up to the **S-LINK** cable without any interface. Both the emitter and the receiver are incorporated with bright orange LED job indicators that are easily visible to the operator.

OPTIONS

Designation	Model No.	Description
Sensor mounting bracket	**MS-NA1-1**	Four bracket set [Four M4 (length 15 mm 0.591 in) screws with washers, eight nuts, four hooks, four spacers and eight M4 (length 18 mm 0.709 in) screws with washers are attached. (Spacers are not attached with **MS-NA1-1**.)]
	MS-NA2-1	
Sensor protection bracket	**MS-NA3**	It protects the sensor body. Two silver bracket set [Four M4 (length 15 mm 0.591 in) screws with washers, and four nuts are attached.]
	MS-NA3-BK	It protects the sensor body. Two black bracket set [Four M4 (length 15 mm 0.591 in) screws with washers, and four nuts are attached.]
Slit mask	**OS-NA1-5** 10 pcs. per set	The slit mask restrains the amount of beam emitted or received. (Seal type)
Y-shaped connector	**SL-WY** 5 pcs. per set	This connector is able to combine the cables of receiver and emitter into one.

Sensor mounting bracket

• **MS-NA1-1**

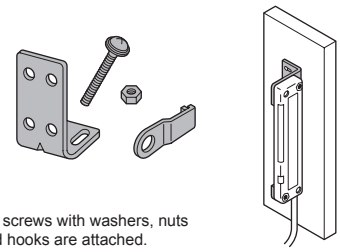

M4 screws with washers, nuts and hooks are attached.

• **MS-NA2-1**

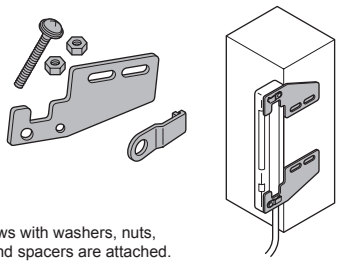

M4 screws with washers, nuts, hooks and spacers are attached.

Sensor protection bracket

• **MS-NA3**
• **MS-NA3-BK**

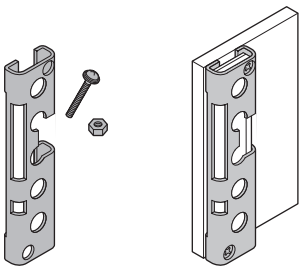

M4 screws with washers, and nuts are attached.

Slit mask

• **OS-NA1-5**

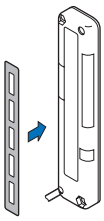

Since the slit mask is of seal type, it can be used by sticking to the detection surface.
Take care that the sensing range will be reduced when the slit mask is used. Please contact our office for details.

Y-shaped connector

• **SL-WY**

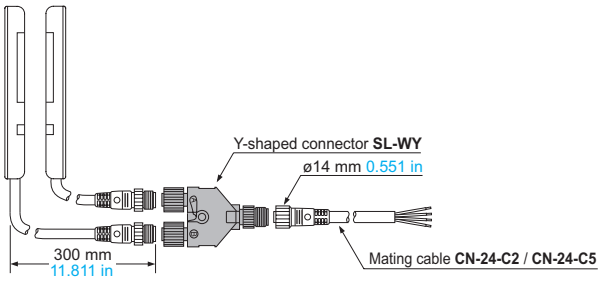

SPECIFICATIONS

Item / Type		NPN output		PNP output	
		High-luminous job indicator type	Long sensing range type	High-luminous job indicator type	Long sensing range type
Model No.		**NA1-PK5**	**NA1-5**	**NA1-PK5-PN**	**NA1-5-PN**
Sensing height		100 mm 3.937 in			
Sensing range (Note 2)		0.1 to 1.2 m 0.328 to 3.937 ft (0.05 to 0.5 m 0.164 to 1.640 ft when set to SHORT)	0.2 to 3 m 0.656 to 9.843 ft (0.05 to 1 m 0.164 to 3.281 ft when set to SHORT)	0.1 to 1.2 m 0.328 to 3.937 ft (0.05 to 0.5 m 0.164 to 1.640 ft when set to SHORT)	0.2 to 3 m 0.656 to 9.843 ft (0.05 to 1 m 0.164 to 3.281 ft when set to SHORT)
Beam pitch		25 mm 0.984 in			
Number of beam channels		5 beam channels			
Sensing object		ø35 mm ø1.378 in or more opaque object (completely beam interrupted object)			
Supply voltage		12 to 24 V DC ±10 % Ripple P-P 10 % or less			
Power consumption (Note 3)		Emitter: 0.5 W or less, Receiver: 0.8 W or less		Emitter: 0.6 W or less, Receiver: 0.9 W or less	
Output		NPN open-collector transistor • Maximum sink current: 100 mA • Applied voltage: 30 V DC or less (between output and 0 V) • Residual voltage: 1 V or less (at 100 mA sink current) 0.4 V or less (at 16 mA sink current)		PNP open-collector transistor • Maximum source current: 100 mA • Applied voltage: 30 V DC or less (between output and +V) • Residual voltage: 1 V or less (at 100 mA source current) 0.4 V or less (at 16 mA source current)	
	Utilization category	DC-12 or DC-13			
	Output operation	ON or OFF when one or more beam channels are interrupted / ON or OFF when two or more beam channels are interrupted, selectable by operation mode switch			
	Short-circuit protection	Incorporated			
Response time		10 ms or less (when the interference prevention is used, in Light state: 30 ms or less, in Dark state: 13 ms or less)			
Indicators	Emitter	Power indicator: Green LED (lights up when the power is ON) Job indicator: Orange LED (lights up or blinks when the job indicator input is Low, lighting pattern is selected by operation mode switch)		Power indicator: Green LED (lights up when the power is ON) Job indicator: Orange LED (lights up or blinks when the job indicator input is High, lighting pattern is selected by operation mode switch)	
	Receiver	Operation indicator: Red LED (lights up when one or more beam channels are interrupted, but lights up when two beam channels or more are interrupted in the double-beam-interruption mode) Stable incident beam indicator: Green LED (lights up when all beam channels are stably received) Job indicator: Orange LED (lights up or blinks when the job indicator input is Low, lighting pattern is selected by operation mode switch)		Operation indicator: Red LED (lights up when one or more beam channels are interrupted, but lights up when two beam channels or more are interrupted in the double-beam-interruption mode) Stable incident beam indicator: Green LED (lights up when all beam channels are stably received) Job indicator: Orange LED (lights up or blinks when the job indicator input is High, lighting pattern is selected by operation mode switch)	
Interference prevention function		Incorporated			
Environmental resistance	Pollution degree	3 (Industrial environment)			
	Protection	IP62 (IEC)			
	Ambient temperature	–10 to +55 °C +14 to +131 °F (No dew condensation or icing allowed), Storage: –20 to +70 °C –4 to +158 °F			
	Ambient humidity	35 to 85 % RH, Storage: 35 to 85 % RH			
	Ambient illuminance	Incandescent light: 3,000 ℓx at the light-receiving face			
	EMC	EN 60947-5-2			
	Voltage withstandability	1,000 V AC for one min. between all supply terminals connected together and enclosure			
	Insulation resistance	20 MΩ, or more, with 250 V DC megger between all supply terminals connected together and enclosure			
	Vibration resistance	10 to 150 Hz frequency, 0.75 mm 0.030 in amplitude in X, Y and Z directions for two hours each			
	Shock resistance	490 m/s² acceleration (50 G approx.) in X, Y and Z directions for three times each			
Emitting element		Infrared LED (Peak emission wavelength: 950 nm 0.037 mil, synchronized scanning system)			
Material		Enclosure: Heat-resistant ABS, Lens cover: Acrylic, Indicator cover: Acrylic			
Cable		0.3 mm² 4-core (emitter: 3-core) oil resistant cabtyre cable, 2 m 6.562 ft long			
Cable extension		Extension up to total 100 m 328.084 ft is possible for both emitter and receiver with 0.3 mm², or more, cable.			
Weight		Net weight: Emitter 80 g approx. Receiver 85 g approx. Gross weight: 270 g approx.	Net weight: Emitter 70 g approx. Receiver 80 g approx. Gross weight: 270 g approx.	Net weight: Emitter 80 g approx. Receiver 85 g approx. Gross weight: 270 g approx.	Net weight: Emitter 70 g approx. Receiver 80 g approx. Gross weight: 270 g approx.

Notes: 1) Where measurement conditions have not been specified precisely, the conditions used were an ambient temperature of +23 °C +73.4 °F.
2) The sensing range is the possible setting distance between the emitter and the receiver.
3) Obtain the current consumption by the following equation.
Current consumption = Power consumption ÷ Supply voltage
(e.g.) When the supply voltage is 12 V,
the current consumption of the emitter is:
0.5 W ÷ 12 V ≈ 0.042 A = 42 mA

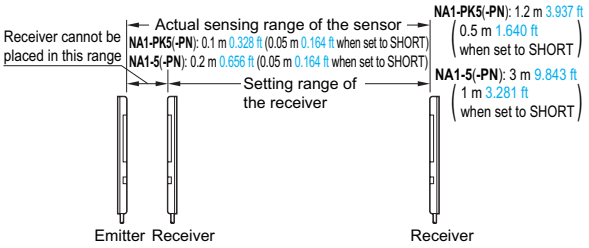

I/O CIRCUIT AND WIRING DIAGRAMS

NA1-PK5 NA1-5 — NPN output type

I/O circuit diagram

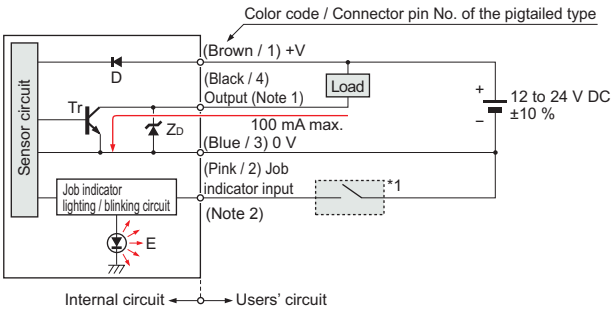

Notes: 1) The emitter does not incorporate the output (black).
2) If a connection cable is connected to the relay connector type, then the lead wire color is "white".
3) Unused wire must be insulated to ensure that they do not come into contact with wires already in use.

Symbols … D : Reverse supply polarity protection diode
ZD: Surge absorption zener diode
Tr : NPN output transistor
E : Job indicator (IND.)

* 1

Non-contact voltage or NPN open-collector transistor

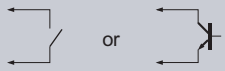

- Job indicator input
  Low (0 to 2 V): Lights up or Blinks
  High (5 to 30 V, or open): Lights off

Wiring diagram

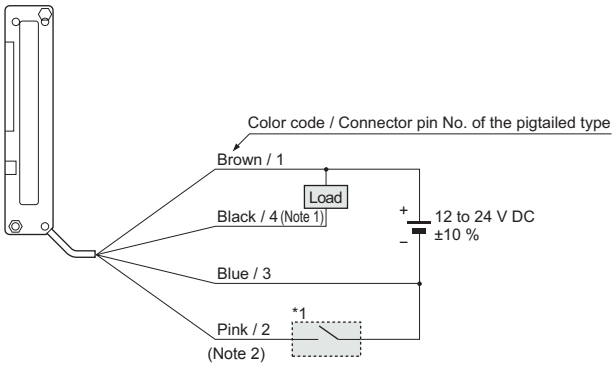

Notes: 1) The emitter does not incorporate the black lead wire.
2) If a connection cable is connected to the relay connector type, then the lead wire color is "white".
3) Unused wires must be insulated to ensure that they do not come into contact with wires already in use.

Connector pin position (Pigtailed type)

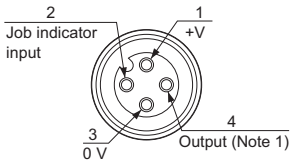

Notes: 1) No connection is required for the emitter.
2) The pin arrangement of the **SL-WY** Y-shaped connector (optional) is identical to the receiver.

NA1-PK5-PN NA1-5-PN — PNP output type

I/O circuit diagram

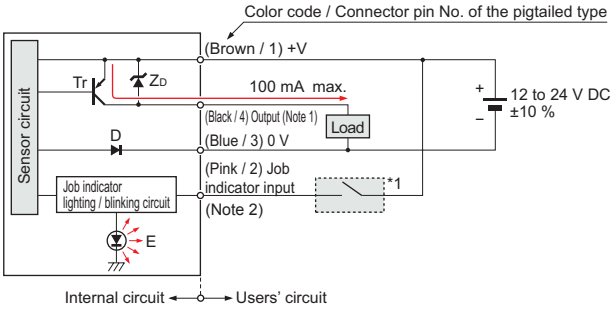

Notes: 1) The emitter does not incorporate the output (black).
2) If a connection cable is connected to the relay connector type,then the lead wire color is "white".
3) Unused wire must be insulated to ensure that they do not come into contact with wires already in use.

Symbols … D : Reverse supply polarity protection diode
ZD: Surge absorption zener diode
Tr : PNP output transistor
E : Job indicator (IND.)

* 1

Non-contact voltage or PNP open-collector transistor

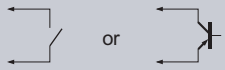

- Job indicator input
  High (4 V or more): Lights up or Blinks
  Low (0 to 0.6 V, or open): Lights off

Wiring diagram

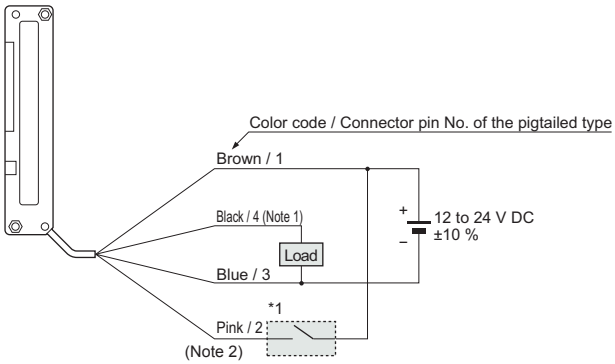

Notes: 1) The emitter does not incorporate the black lead wire.
2) If a connection cable is connected to the relay connector type, then the lead wire color is "white".
3) Unused wires must be insulated to ensure that they do not come into contact with wires already in use.

Connector pin position (Pigtailed type)

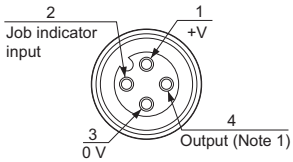

Notes: 1) No connection is required for the emitter.
2) The pin arrangement of the **SL-WY** Y-shaped connector (optional) is identical to the receiver.

SENSING CHARACTERISTICS (TYPICAL)

NA1-PK5 NA1-PK5-PN

Parallel deviation

Vertical direction

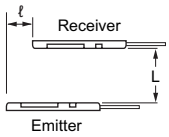

• Vertical direction

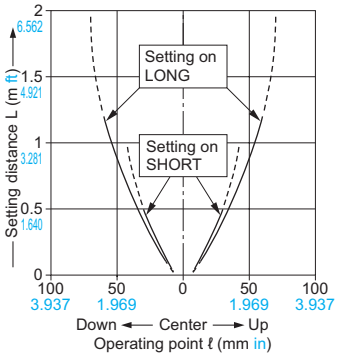

Horizontal direction

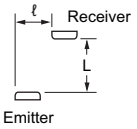

• Horizontal direction

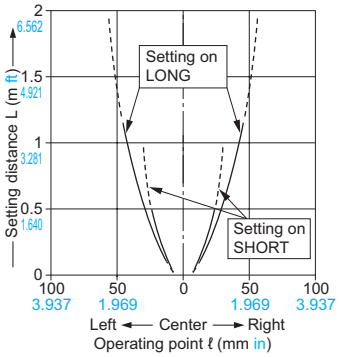

Angular deviation

Emitter angular deviation

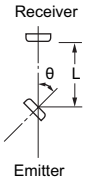

• Setting on LONG

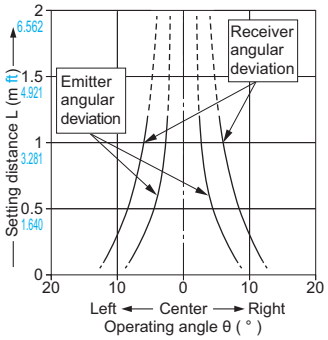

• Setting on SHORT

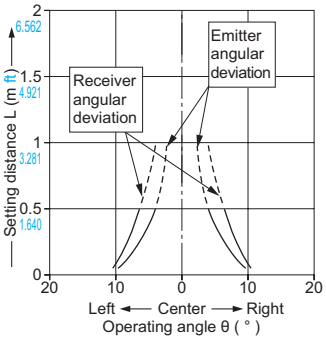

Receiver angular deviation

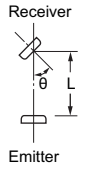

NA1-5 NA1-5-PN

Parallel deviation

Vertical direction

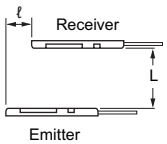

• Common for both horizontal and vertical directions

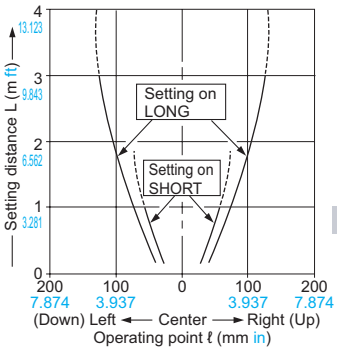

Horizontal direction

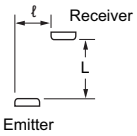

Angular deviation

Emitter angular deviation

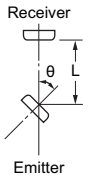

• Setting on LONG

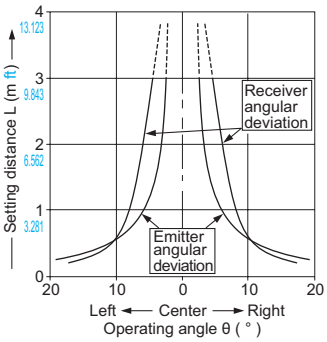

• Setting on SHORT

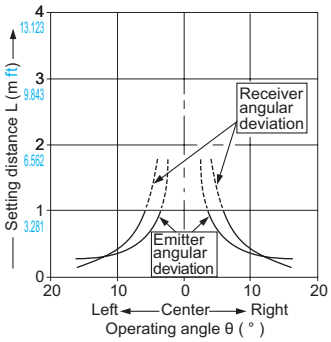

Receiver angular deviation

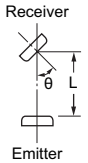

PRECAUTIONS FOR PROPER USE

Refer to p.1458~ for general precautions.

- Never use this product as a sensing device for personnel protection.
- For sensing devices to be used as safety devices for press machines or for personnel protection, use products which meet standards, such as OSHA, ANSI or IEC etc., for personnel protection applicable in each region or country.
- If this product is used as a sensing device for personnel protection, death or serious body injury could result.
- For a product which meets safety standards, use the following products.
  Type4: **SF4C** series (p.531~)
  Type2: **SF2C** series (p.551~)

Mounting

- Use M4 screws with washers and M4 nuts. The tightening torque should be 0.5 N·m or less.

(Purchase the screws and nuts separately.)

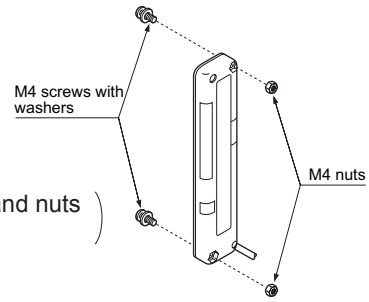

Orientation

- The emitter and the receiver must face each other correctly. If they are set upside down, the sensor does not work.

Correct

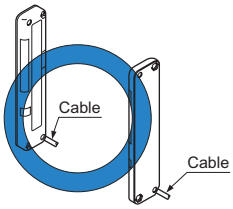

Incorrect

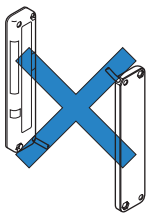

Interference prevention function

- By setting different emission frequencies, two units of the sensor can be mounted close together, as shown in the figure below.

(The switches must be set with the power supply off. The operation mode does not change if the switch setting is changed with the power supplied.)

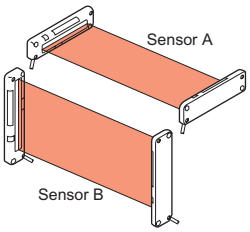

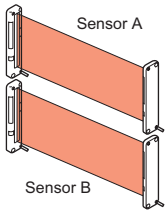

	Operation mode switch	
	Emitter	Receiver
Sensor A (FREQ. A)	FREQ. A / FREQ. B	FREQ. A / FREQ. B
Sensor B (FREQ. B)	FREQ. A / FREQ. B	FREQ. A / FREQ. B

LONG / SHORT selection switch (incorporated on the emitter)

- Select the switch setting according to the setting distance between the emitter and the receiver as given below.

(The switches must be set with the power supply off. The operation mode does not change if the switch setting is changed with the power supplied.)

Setting distance	Operation mode switch
0.05 to 0.5 m 0.164 to 1.640 ft [**NA1-PK5(-PN)**] 0.05 to 1 m 0.164 to 3.281 ft [**NA1-5(-PN)**]	LONG / SHORT
0.5 to 1.2 m 1.640 to 3.937 ft [**NA1-PK5(-PN)**] 1 to 3 m 3.281 to 9.843 ft [**NA1-5(-PN)**]	LONG / SHORT

Selection of output operation

- The output operation mode is selected by the operation mode switch on the receiver.

(The switches must be set with the power supply off. The operation mode does not change if the switch setting is changed with the power supplied.)

Output operation	Operation mode switch
ON when one or more beam channels are interrupted (OFF when all beam channels are received).	SINGLE D / ON / DOUBLE L / ON
OFF when one or more beam channels are interrupted (ON when all beam channels are received).	SINGLE D / ON / DOUBLE L / ON
ON when any two or more beam channels are interrupted.	SINGLE D / ON / DOUBLE L / ON
OFF when any two or more beam channels are interrupted.	SINGLE D / ON / DOUBLE L / ON

Job indicator operation selection

- Lighting / Blinking is selected by the operation mode switch on the emitter and the receiver.

(The switches must be set with the power supply off. The operation mode does not change if the switch setting is changed with the power supplied.)

	Operation mode switch	
	Emitter	Receiver
Lighting	LIGHT / FLASH	LIGHT / FLASH
Blinking	LIGHT / FLASH	LIGHT / FLASH

Others

- Do not use during the initial transient time (0.5 sec.) after the power supply is switched on.

DIMENSIONS (Unit: mm in)

The CAD data in the dimensions can be downloaded from our website.

NA1-PK5(-PN) NA1-5(-PN)

Sensor

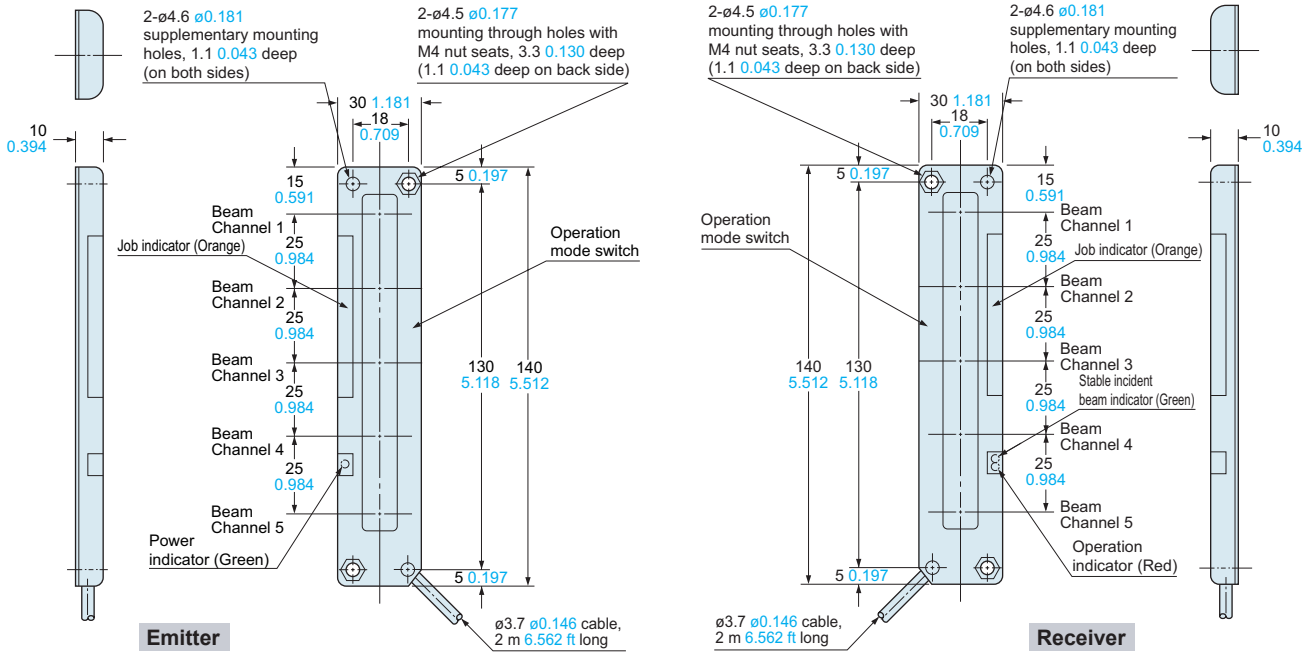

MS-NA1-1

Sensor mounting bracket (Optional)

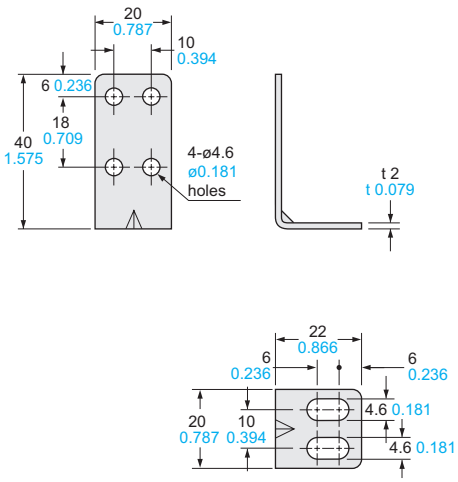

Material: Cold rolled carbon steel (SPCC)
(Uni-chrome plated)

Four bracket set

[Four M4 (length 15 mm 0.591 in) screws with washers, eight nuts, four hooks and eight M4 (length 18 mm 0.709 in) screws with washers are attached.
[M4 (length 18 mm 0.709 in) screws with washers are not used for **NA1-PK5/5** series.]]

Assembly dimensions

Mounting drawing with the receiver

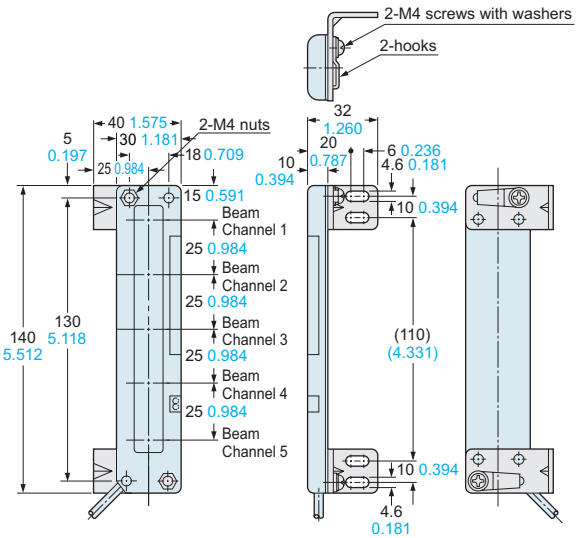

DIMENSIONS (Unit: mm in)

The CAD data in the dimensions can be downloaded from our website.

MS-NA2-1

Sensor mounting bracket (Optional)

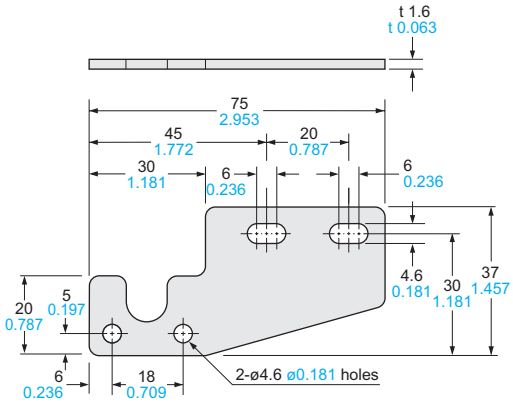

Material: Cold rolled carbon steel (SPCC)
(Uni-chrome plated)

Four bracket set

[Four M4 (length 15 mm 0.591 in) screws with washers, eight nuts, four hooks, four spacers and eight M4 (length 18 mm 0.709 in) screws with washers are attached.]

Assembly dimensions

Mounting drawing with the receiver

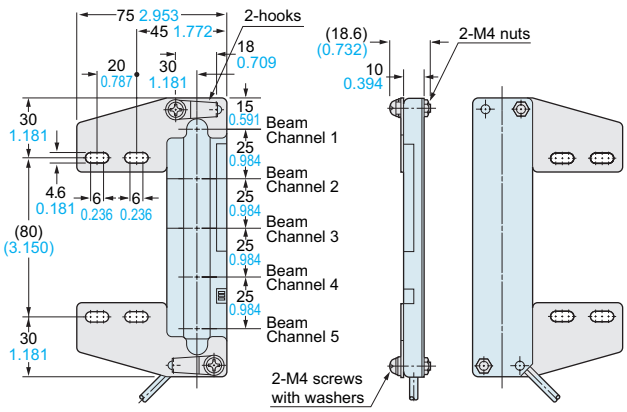

MS-NA3 MS-NA3-BK

Sensor protection bracket (Optional)

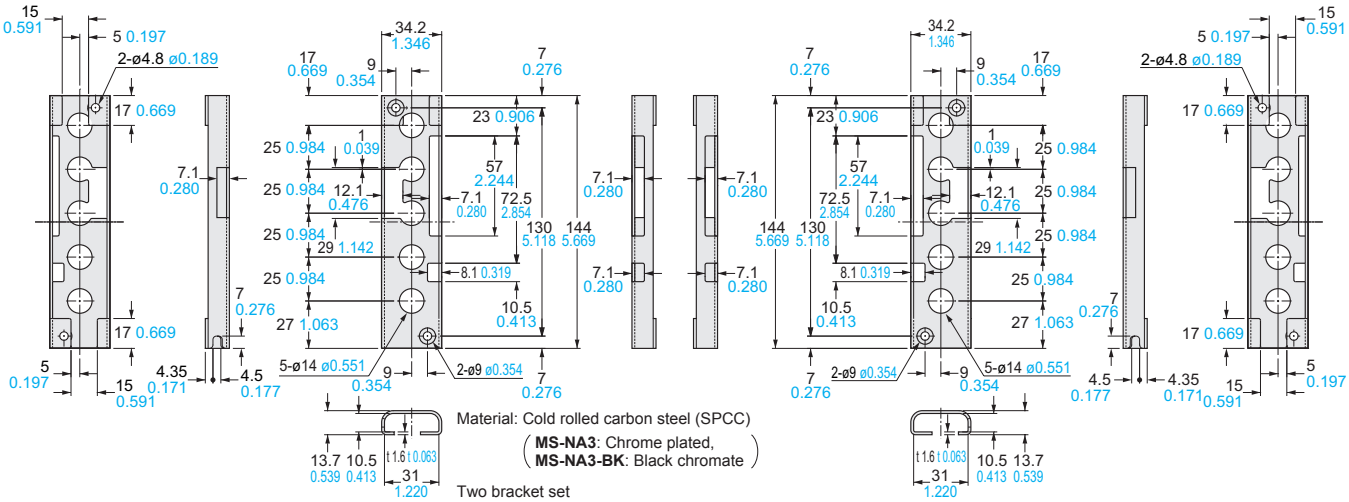

SL-N15

S-LINK direct hook-up area sensor