Chipsmall Limited consists of a professional team with an average of over 10 year of expertise in the distribution of electronic components. Based in Hongkong, we have already established firm and mutual-benefit business relationships with customers from,Europe,America and south Asia,supplying obsolete and hard-to-find components to meet their specific needs.

With the principle of “Quality Parts,Customers Priority,Honest Operation,and Considerate Service”,our business mainly focus on the distribution of electronic components. Line cards we deal with include Microchip,ALPS,ROHM,Xilinx,Pulse,ON,Everlight and Freescale. Main products comprise IC,Modules,Potentiometer,IC Socket,Relay,Connector.Our parts cover such applications as commercial,industrial, and automotives areas.

We are looking forward to setting up business relationship with you and hope to provide you with the best service and solution. Let us make a better world for our industry!

Contact us

Tel: +86-755-8981 8866 Fax: +86-755-8427 6832
Email & Skype: info@chipsmall.com Web: www.chipsmall.com
Address: A1208, Overseas Decoration Building, #122 Zhenhua RD., Futian, Shenzhen, China

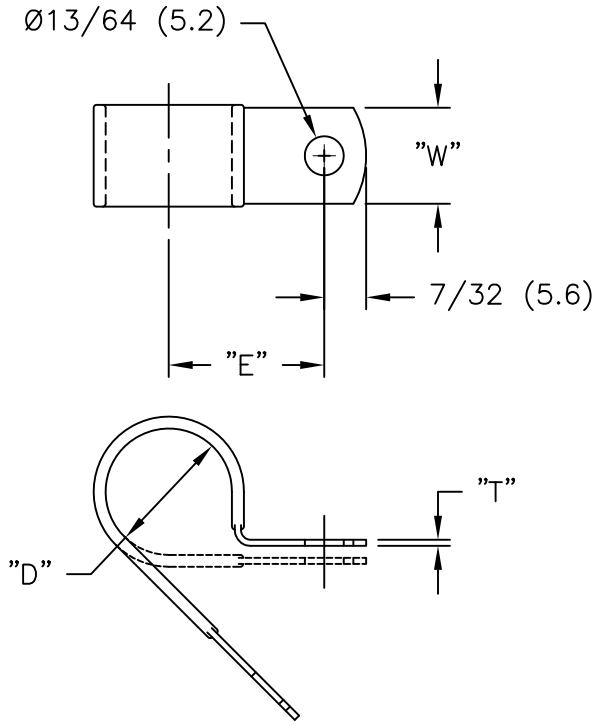

PART NO.	HOLDING DIA. "D"	"E" REF.	"T"	"W"
NE3	3/16 (4.8)	.50 (12.7)	1/32 (0.8)	3/8 (9.5)
NE4	1/4 (6.4)	.53 (13.5)		
NE5	5/16 (7.9)	.56 (14.2)		
NE6	3/8 (9.5)	.59 (15.0)		
NE7	7/16 (11.1)	.62 (15.7)		
NE8	1/2 (12.7)	.65 (16.5)		
NE9	9/16 (14.3)	.75 (19.1)		
NE10	5/8 (15.9)	.78 (19.8)		
NE11	11/16 (17.5)	.81 (20.6)	1/16 (1.6)	1/2 (12.7)
NE12	3/4 (19.1)	.84 (21.3)		
NE14	7/8 (22.2)	.90 (22.9)		
NE16	1 (25.4)	.96 (24.4)		
NE18	1-1/8 (28.6)	1.05 (26.7)		
NE20	1-1/4 (31.8)	1.11 (28.2)		

NOTES:
1. MAT'L: ALUMINUM ALLOY 5052 H-32 (RMS-199).
2. COATING: PVC (RMS-118), NOMINAL THICKNESS 1/32 (0.8).
2. COLOR: BLACK.

REV	DESCRIPTION	ENGR DATE
F	UPDATED NOTE 2, PVC WAS TPV, CO 200534	DK 05.26.10
E	SEE CO 200385 FOR CHANGES	SJ 07.14.09
D	SEE CO 200143 FOR CHANGES	SK 03.25.08
C	SEE ECN #927 FOR CHANGES	SK 01.31.05
B	DRAWING UPDATED AND CHANGED FILE NO.	SM 09.26.01
A	CONVERTED TO ACAD	PB 01.18.95

TITLE: CABLE CLAMPS, PVC COATED

DWG IN IN (MM)

TOLERANCES UNLESS NOTED
.XX=±.010
.XXX=±.005
FRAC=±1/64
ANG=±1°

FILE # NE
MAT'L: SEE NOTES
RE: RICHCO, INC.

DWN: P.B.
APP:
DT: 01-18-95
DT:

RICHCO INC.
PO BOX 804238,CHICAGO,60680
(773) 539-4060

FINAL

PART # NE SERIES

PRINT TYPE CA