Chipsmall Limited consists of a professional team with an average of over 10 year of expertise in the distribution of electronic components. Based in Hongkong, we have already established firm and mutual-benefit business relationships with customers from,Europe,America and south Asia,supplying obsolete and hard-to-find components to meet their specific needs.

With the principle of “Quality Parts,Customers Priority,Honest Operation,and Considerate Service”,our business mainly focus on the distribution of electronic components. Line cards we deal with include Microchip,ALPS,ROHM,Xilinx,Pulse,ON,Everlight and Freescale. Main products comprise IC,Modules,Potentiometer,IC Socket,Relay,Connector.Our parts cover such applications as commercial,industrial, and automotives areas.

We are looking forward to setting up business relationship with you and hope to provide you with the best service and solution. Let us make a better world for our industry!

Contact us

Tel: +86-755-8981 8866 Fax: +86-755-8427 6832
Email & Skype: info@chipsmall.com Web: www.chipsmall.com
Address: A1208, Overseas Decoration Building, #122 Zhenhua RD., Futian, Shenzhen, China

SYMBOL	REVISION	DATE

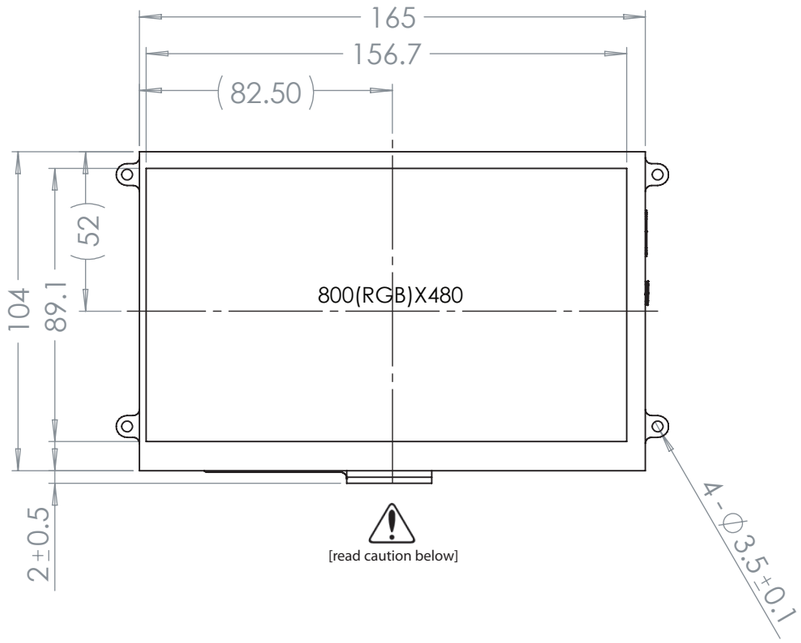

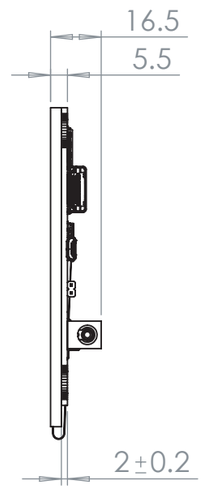

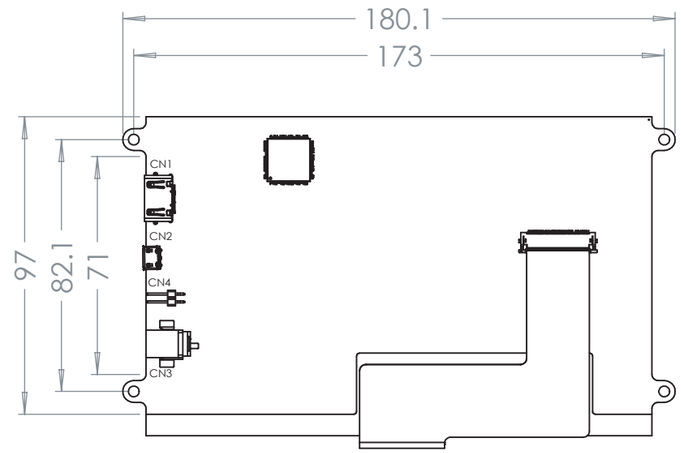

NOTES:
1. 7.0” Sunlight Readable HDMI TFT Module
2. On-board Texas Instruments TFP401A HDMI/DVI Receiver
3. Optimal Viewing Direction: 12:00
4. Display Mode: Transmissive / Normally White / Anti-Glare
5. Luminance: 1000 cd/m²
6. 3M Brightness Enhancement Film
7. On-board Texas Instruments TPS61165 High Brightness LED Driver w/ PWM

Improper handling of the FPC connection at the bottom edge of this module may cause damage resulting in display failure.
Take special care when handling this area of the display module to make sure this connection is never strained nor creased.

STANDARD TOLERANCES (UNLESS OTHERWISE SPECIFIED) LINEAR: ± 0.3mm	NEWHAVEN DISPLAY INTERNATIONAL			
	DRAWING/PART NUMBER: NHD-7.0-HDMI-N-RSXN			REVISION: 1.1
UNLESS OTHERWISE SPECIFIED - DIMENSIONS ARE IN MILLIMETERS - THIRD ANGLE PROJECTION	DRAWN BY: N. Patel	CHECKED BY: P. Bartek	APPROVED BY: M. LaVine	SIZE: A3
	DRAWN DATE: 8/25/17	CHECKED DATE: 8/28/17	APPROVED DATE: 8/29/17	SCALE: 1:2
	DO NOT SCALE DRAWING			SHEET 1 OF 1

THIS DRAWING IS SOLELY THE PROPERTY OF NEWHAVEN DISPLAY INTERNATIONAL, INC. THE INFORMATION IT CONTAINS IS NOT TO BE DISCLOSED, REPRODUCED OR COPIED IN WHOLE OR PART WITHOUT WRITTEN APPROVAL FROM NE WHAVEN DISPLAY.