Chipsmall Limited consists of a professional team with an average of over 10 year of expertise in the distribution of electronic components. Based in Hongkong, we have already established firm and mutual-benefit business relationships with customers from,Europe,America and south Asia,supplying obsolete and hard-to-find components to meet their specific needs.

With the principle of “Quality Parts,Customers Priority,Honest Operation,and Considerate Service”,our business mainly focus on the distribution of electronic components. Line cards we deal with include Microchip,ALPS,ROHM,Xilinx,Pulse,ON,Everlight and Freescale. Main products comprise IC,Modules,Potentiometer,IC Socket,Relay,Connector.Our parts cover such applications as commercial,industrial, and automotives areas.

We are looking forward to setting up business relationship with you and hope to provide you with the best service and solution. Let us make a better world for our industry!

Contact us

Tel: +86-755-8981 8866 Fax: +86-755-8427 6832
Email & Skype: info@chipsmall.com Web: www.chipsmall.com
Address: A1208, Overseas Decoration Building, #122 Zhenhua RD., Futian, Shenzhen, China

THIS COPY IS PROVIDED ON A RESTRICTED BASIS AND IS NOT TO BE USED IN ANY WAY DETRIMENTAL TO THE INTERESTS OF PANDUIT CORP.

Panduit Part Number	Color	CABLE SIZE	Dimension		
			"B" DIA.	"C" INSIDE DIA.	"L"
NWSLC-2Y	YELLOW	2 mm SIMPLEX FIBER OPTIC	0.28 [7.11]	0.093 [2.36]	1.25 [31.75]
NWSLC-3Y	ORANGE	3 mm SIMPLEX FIBER OPTIC	0.30 [7.62]	0.125 [3.175]	
NWSLC-7Y	WHITE	3 mm DUPLEX FIBER OPTIC	0.39 [9.91]	0.270 [6.86]	
NWSLC-2Y-AQ	AQUA	2 mm SIMPLEX FIBER OPTIC	0.28 [7.11]	0.087 [2.21]	
NWSLC2-2Y	YELLOW	2 mm SIMPLEX 10 GIG FIBER OPTIC	0.28 [7.11]	0.093 [2.36]	2.25 [57.15]
NWSLC2-3Y	ORANGE	3 mm SIMPLEX FIBER OPTIC	0.30 [7.62]	0.125 [3.175]	
NWSLC2-7Y	WHITE	3 mm DUPLEX FIBER OPTIC	0.39 [9.91]	0.270 [6.86]	
NWSLC2-2Y-AQ	AQUA	2 mm SIMPLEX 10 GIG FIBER OPTIC	0.28 [7.11]	0.087 [2.21]	

3

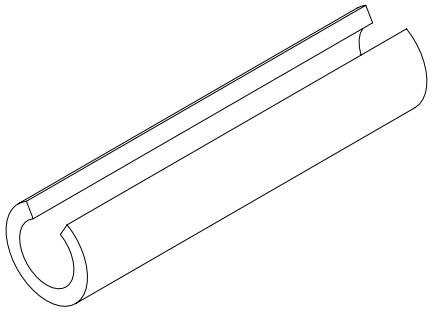

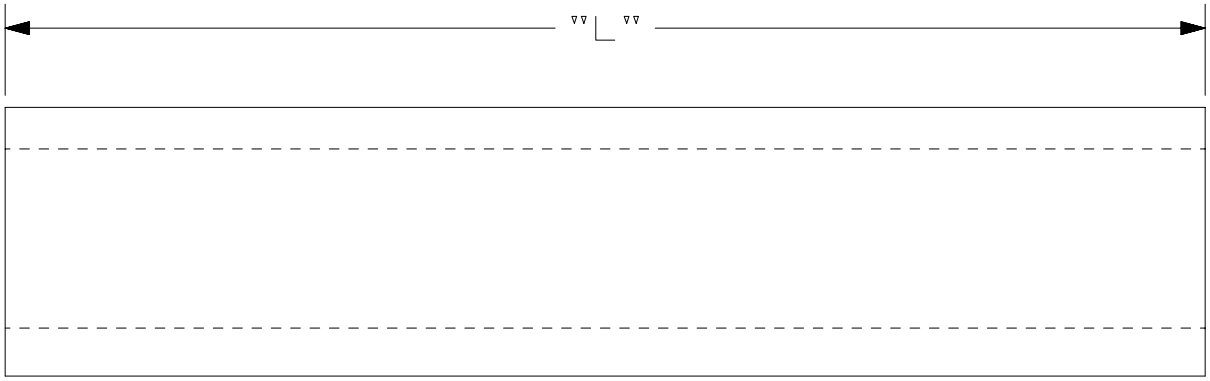

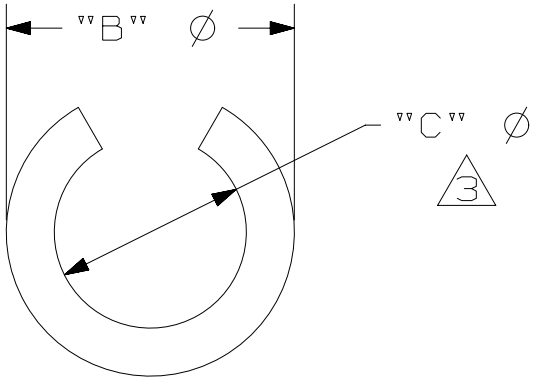

REV	DATE	BY	CHK	APR	DESCRIPTION	ECN
3	4/20/16	RVU	SEWH	JHAC	ADD NEW "C" INSIDE DIAMETER COLUMN for DIMENSION "C".	GAECN03460
2	9/9/11	RVU			Add NWSLC2-2Y, NWSLC2-3Y, NWSLC2-7Y, AND NWSLC2-2Y-AQ. ADD NWSLC-2Y-AQ.	6508
1	11/2/10	RVU			ADD "Y" TO PART NUMBERS. USE "B" INSTEAD OF "A" SIMILAR TO CONTROL DWG.	6217
0	9/23/03	RVU			DRAWING RELEASE.	3420

TITLE

NWSLC-*Y & NWSLC2-*Y LABEL CORE

CUSTOMER DRAWING

ITEM REVISION NAME: I00619QY/03

DATASET FILE NAME: I00619QY_DC_C10098/03D

UNLESS OTHERWISE SPECIFIED, DIMENSIONAL TOLERANCES ARE: IN [mm]

.X ± .XXX ±

.XX ± ANGLES ±

THIRD ANGLE PROJECTION

MATERIAL: FLEXIBLE PVC

DRAWING NUMBER: C10098

DRAWN BY	DATE	CHK	SCALE		SIZE
RVU	9/23/03	JHAC	NTS	SHT 1 OF 1	A