Chipsmall Limited consists of a professional team with an average of over 10 year of expertise in the distribution of electronic components. Based in Hongkong, we have already established firm and mutual-benefit business relationships with customers from,Europe,America and south Asia,supplying obsolete and hard-to-find components to meet their specific needs.

With the principle of “Quality Parts,Customers Priority,Honest Operation,and Considerate Service”,our business mainly focus on the distribution of electronic components. Line cards we deal with include Microchip,ALPS,ROHM,Xilinx,Pulse,ON,Everlight and Freescale. Main products comprise IC,Modules,Potentiometer,IC Socket,Relay,Connector.Our parts cover such applications as commercial,industrial, and automotives areas.

We are looking forward to setting up business relationship with you and hope to provide you with the best service and solution. Let us make a better world for our industry!

Contact us

Tel: +86-755-8981 8866 Fax: +86-755-8427 6832
Email & Skype: info@chipsmall.com Web: www.chipsmall.com
Address: A1208, Overseas Decoration Building, #122 Zhenhua RD., Futian, Shenzhen, China

THIS COPY IS PROVIDED ON A RESTRICTED BASIS AND IS NOT TO BE USED IN ANY WAY DETRIMENTAL TO THE INTERESTS OF PANDUIT CORP.

COVER

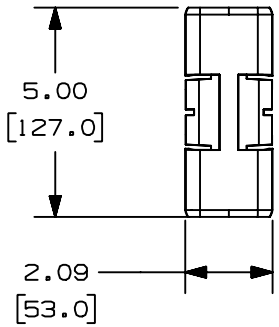

BASE

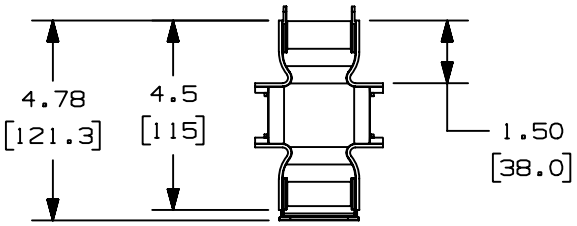

PANDUIT PART NO.	WEIGHT
OFR20DSO	.306 lbs (139.0 g)

A

NOTES:
1. SEE CURRENT CATALOG FOR ADDITIONAL PART NUMBER SUFFIXES TO INDICATE COLOR AND/OR PACKAGE QUANTITY.
2. DIMENSIONS IN PARENTHESES ARE IN METRIC.
3. TAB STOPS ARE USED TO POSITION VERTICAL RACEWAY (OFVR5).
4. FITTING WORKS WITH FURNITURE PANELS 1.88"-2.30" THICK.

COVER CAP

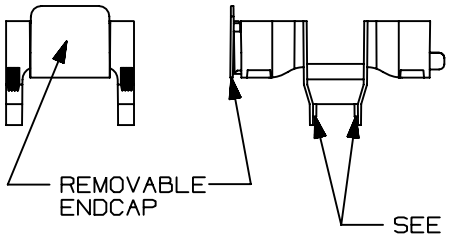

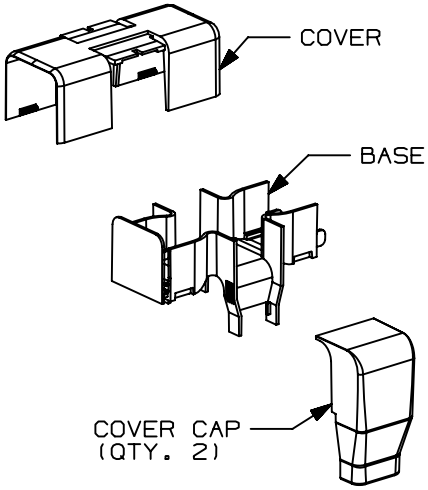

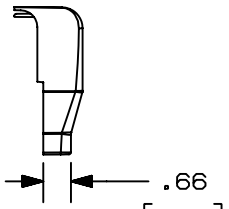

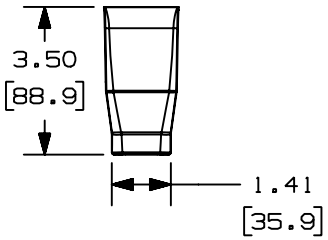

REV	DATE	BY	CHK	DESCRIPTION	ECN	CHK	CUST	SUP
----	------	---	----	RELEASED TO PRODUCTION	------	----	----	
1	02-16-05	JHEP	RMHI	A. REVISED PART WEIGHT	38883-03	RGRO	RGRO	
R	07-06-04	JBN	RMHI	DRAWING RELEASED				

CAD FILENAME/LAYERS: D38883BC_DC_OFR20DSO_00B.PRT

PANDUIT CORP. TINLEY PARK, ILLINOIS

OFFICE FURNITURE DOUBLE SPILL-OVER FITTING (OFR20DSO)
CUSTOMER DRAWING

UNLESS OTHERWISE SPECIFIED, DIMENSIONAL TOLERANCES ARE:
(.X) ± (.XXX) ±
(.XX) ±.03 [.8] ANGLES ±

UNLESS OTHERWISE SPECIFIED, ALL DIMENSIONS ARE GIVEN IN INCHES, THIRD ANGLE PROJECTION.

DRAWN BY: JBN
DATE: 07-06-04
CHK'D: RMHI
MAT'L: PVC
SCALE: NONE
DRAWING NO.: 38883-03
DWG SIZE: A