Chipsmall Limited consists of a professional team with an average of over 10 year of expertise in the distribution of electronic components. Based in Hongkong, we have already established firm and mutual-benefit business relationships with customers from,Europe,America and south Asia,supplying obsolete and hard-to-find components to meet their specific needs.

With the principle of “Quality Parts,Customers Priority,Honest Operation,and Considerate Service”,our business mainly focus on the distribution of electronic components. Line cards we deal with include Microchip,ALPS,ROHM,Xilinx,Pulse,ON,Everlight and Freescale. Main products comprise IC,Modules,Potentiometer,IC Socket,Relay,Connector.Our parts cover such applications as commercial,industrial, and automotives areas.

We are looking forward to setting up business relationship with you and hope to provide you with the best service and solution. Let us make a better world for our industry!

Contact us

Tel: +86-755-8981 8866 Fax: +86-755-8427 6832
Email & Skype: info@chipsmall.com Web: www.chipsmall.com
Address: A1208, Overseas Decoration Building, #122 Zhenhua RD., Futian, Shenzhen, China

Copyright FCI.

FCIconnect.com

PRODUCT NUMBER
20020110-XXXXXXXLF

20020110- □ □ □ □ A 0 □ L F

PITCH
- C: 3.50 mm
- D: 3.81 mm
- G: 5.00 mm
- H: 5.08 mm

POLES
- 02: 2 POLES
- 03: 3 POLES
- 04: 4 POLES
- 24: 24 POLES

LF : DENOTED RoHS COMPATIBLE

1 : STANDARD PRODUCT W/ BOX PACKING

PROPERTY TABLE					
FCI SERIES NAME		06-350	06-381	06-500	06-508
PITCH (mm)		3.50	3.81	5.00	5.08
VOLTAGE RATING (VAC)		300	300	300	300
CURRENT RATING (A)	cULus	10	10	12	12
	VDE	10.5	10.5	NA	NA
WITHSTANDING VOLTAGE (kV)	cULus	1.6	1.6	1.6	1.6
	VDE	2.5	2.5	NA	NA
OPERATING TEMP. (°C)		-40~+115	-40~+115	-40~+115	-40~+115
SOLDERING TEMP. (°C)		250±10 (5 sec.)	250±10 (5 sec.)	250±10 (5 sec.)	250±10 (5 sec.)
POLES AVAILABLE		02~24	02~24	02~24	02~24
SAFETY CERTIFICATE		cULus VDE		cULus	

HOUSING CODE

CODE	COLOR	AVAILABILTY
1	GREEN(RAL 6018/T)	STANDARD
2	BLACK	ON REQUEST ONLY
3	GREY(RAL 7004/P)	ON REQUEST ONLY
4	BLUE(RAL 5015/A)	ON REQUEST ONLY

NOTES:
MATERIALS
1-1 HOUSING: THERMALPLASTIC RESIN, UL 94V-0 RATED.
1-2 TERMINAL: COPPER ALLOY, TIN PLATED.
2. PRODUCTION SPECIFICATION REFER TO FCI GS-12-625.
3. BOXED PACKAGING.
DETAILED PRODUCT PACKING SPECIFICATION REFER TO FCI GS-14-1394.
4. FCI, SAFETY CERTIFICATE LOGO AND SERIES NAME TO BE SHOWN ON PRODUCT SURFACE.
5. THE PRODUCTS WHERE THE PART NUMBER END IN "LF" MEET THE EUROPEAN UNION DIRECTIVE AND OTHER COUNTRY REGULATIONS AS DESCRIBED IN GS-22-008.
6. RECOMENDED SOLDERING PROCESS BY WAVE SOLDER.

ltr	ecn no	dr	date
H	T10-0193	WL	122310
J	T11-0013	WL	040811
K	T-004746	WL	072011

mat'l. code | surface ASME Y14.5 | tolerance ASME Y14.5 | projection | product family: TERMINAL BLOCK

tolerances unless otherwise specified
angles: X°±1° | linear: X.±0.5[.020], X.X±0.3[.012], X.XX±0.1[.004]
MM [INCH]
scale

dr	BEER FU	062509
engr	BEER FU	062509
chr	GARY HSIEH	062509
appd	JOSEPH HSIA	062509

title: TERMINAL BLOCK PLUGGABLE SOCKET, RIGHT ANGLE
dwg no: 20020110 | sheet 1 of 5 | size: A4
type: CUSTOMER Drawing

sheet index	1	2	3	4	5
revision	K	K	K	K	K

form: A4mmXLc

PDS: Rev :K3 STATUS:Released Printed: Aug 02, 2011

Copyright FCI.

PRODUCT NUMBER	SERIES NAME	PITCH
20020110-CXXXXXXLF	06-350	3.50 mm

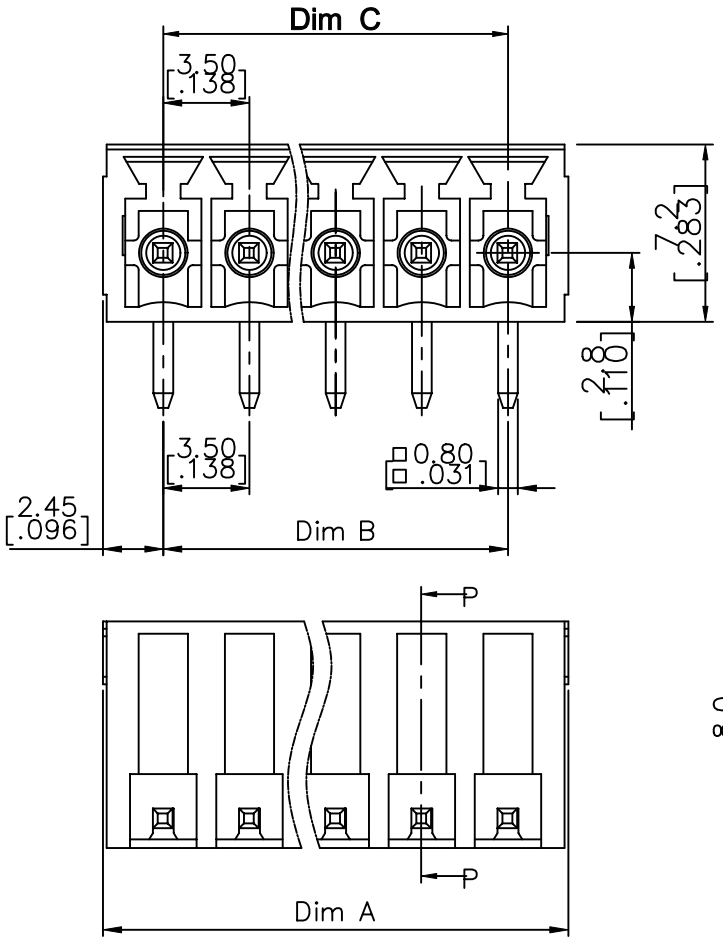

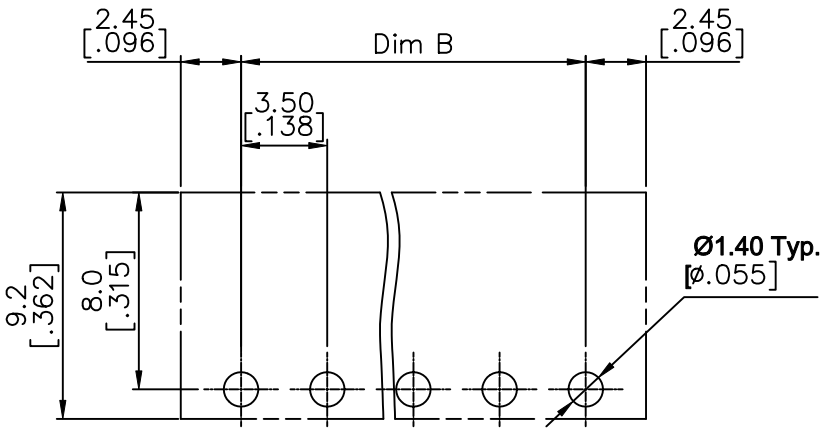

RECOMMENDED P.C.B LAYOUT

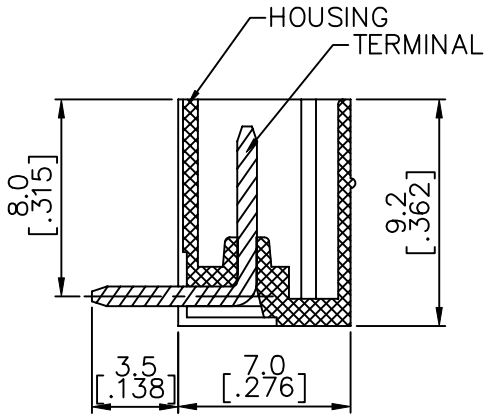

SECTION P-P

N= NUMBER OF POLES

DIMENSION

Dim A	(N-1)*3.5[.138]+4.9[.193]
Dim B	(N-1)X3.5[.138]
Dim C	(N-1)X3.5[.138]

Poles	Tolerance
2P-6P	±0.15[.006]
7P-12P	±0.20[.008]
13P-18P	±0.25[.010]
19P-24P	±0.30[.012]

mat'l. code		surface ASME Y14.5	tolerance ASME Y14.5
ltr	ecn no dr date	tolerances unless otherwise specified	
K		angles	linear X.±0.5[.020]
		X°±1°	X.X±0.3[.012]
			X.XX±0.1[.004]
		dr BEER FU	062509
		engr BEER FU	062509
		chr GARY HSIEH	062509
		appd JOSEPH HSIA	062509
sheet index	revision sheet		

projection | MM [INCH] | scale

product family: TERMINAL BLOCK

title: TERMINAL BLOCK
PLUGABLE, SOCKET, SIGNAL, R/A

dwg no 20020110 | sheet 2 of 5 | size A4

type: CUSTOMER Drawing

Copyright FCI.

FCIconnect.com

PRODUCT NUMBER	SERIES NAME	PITCH
20020110-DXXXXXXLF	06-381	3.81 mm

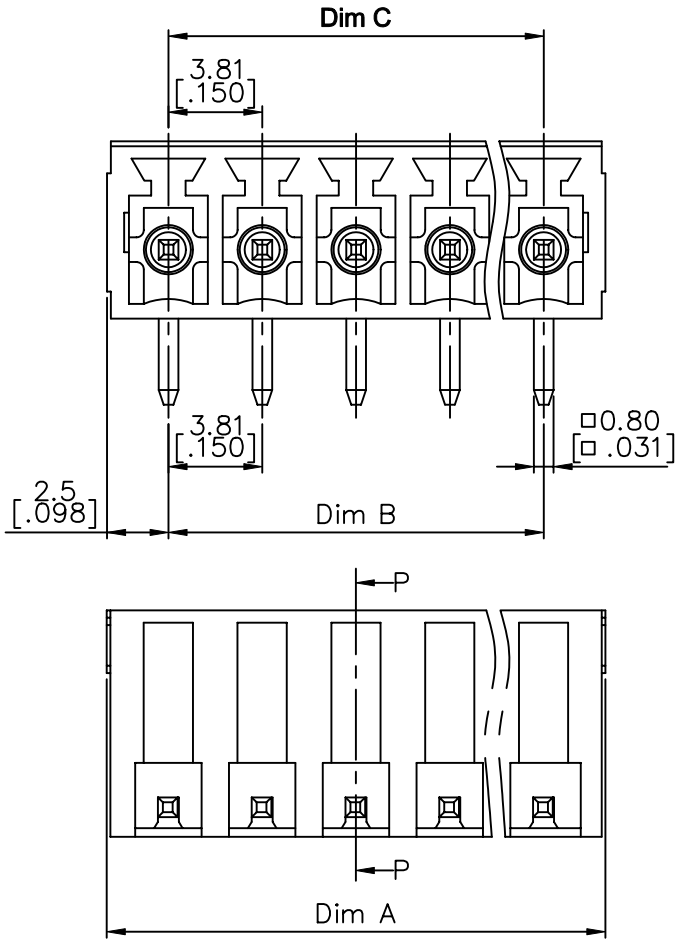

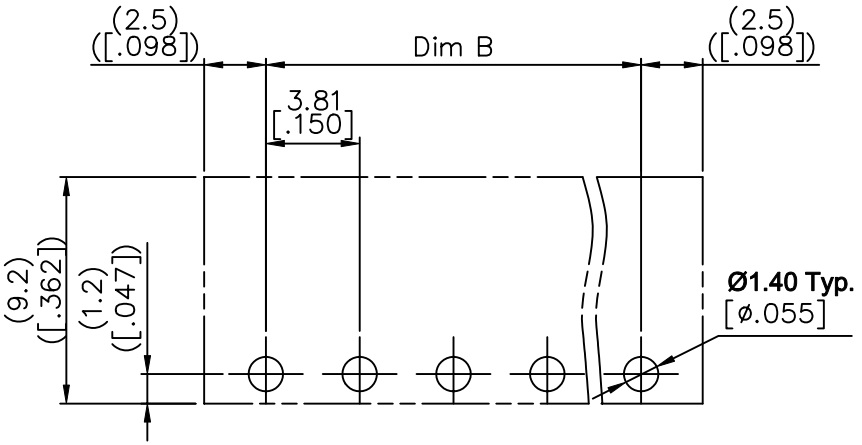

RECOMMENDED P.C.B LAYOUT

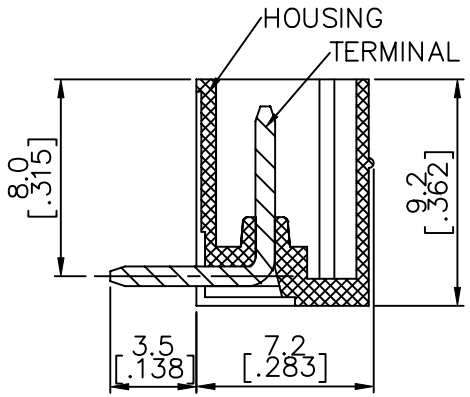

SECTION P-P

N= NUMBER OF POLES
DIMENSION

Dim A	(N-1)*3.81[.150]+5.0[.197]
Dim B	(N-1)X3.81[.150]
Dim C	(N-1)X3.81[.150]

Poles	Tolerance
2p-6p	±0.15[.006]
7p-12p	±0.20[.008]
13p-16p	±0.25[.010]
17p-24p	±0.30[.012]

mat'l. code		surface ASME Y14.5	tolerance ASME Y14.5
ltr	ecn no	dr	date
K			
tolerances unless otherwise specified			
angles	X.±0.5[.020]		
linear	X.X±0.3[.012]		
X°±1°	X.XX±0.1[.004]		
dr	BEER FU	062509	
engr	BEER FU	062509	
chr	GARY HSIEH	062509	
appd	JOSEPH HSIA	062509	

projection | MM [INCH] | scale

product family: TERMINAL BLOCK

title: TERMINAL BLOCK
PLUGABLE, SOCKET, SIGNAL, R/A

dwg no: 20020110 | sheet 3 of 5 | size A4

type: CUSTOMER Drawing

sheet index | revision sheet

Copyright FCI.

FCIconnect.com

PRODUCT NUMBER	SERIES NAME	PITCH
20020110-GXXXXXXLF	06-500	5.00 mm

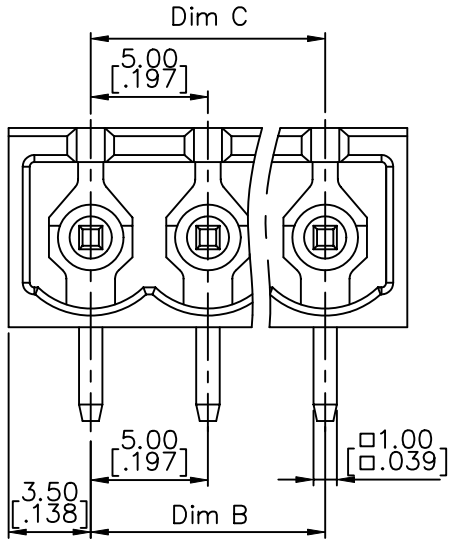

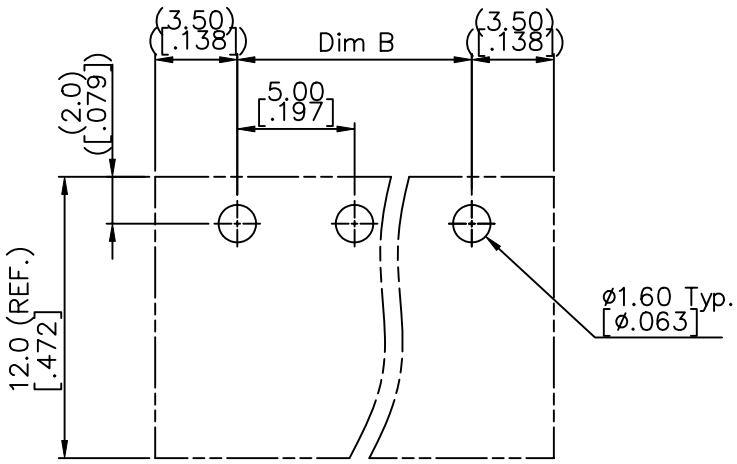

RECOMMENDED P.C.B LAYOUT

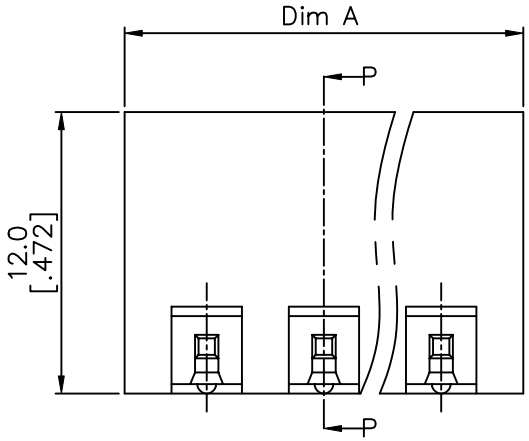

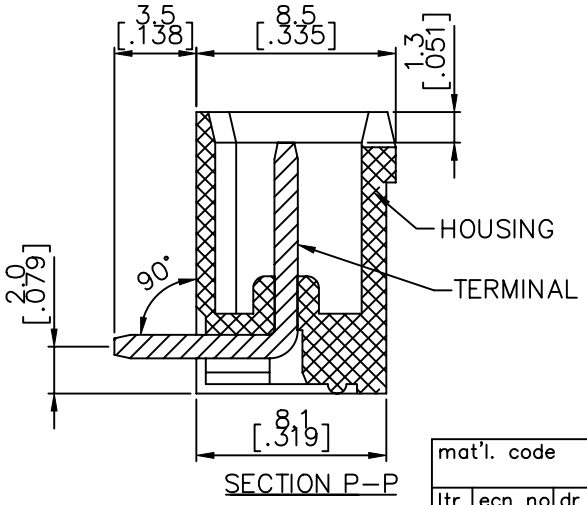

SECTION P-P

N = NUMBER OF POLES
DIMENSION

Dim A	N*5.0[.197]+2.0[.193]
Dim B	(N-1)*5.0[.197]
Dim C	(N-1)*5.0[.197]

Poles	Tolerance
2p-6p	±0.15[.006]
7p-12p	±0.25[.010]
13p-16p	±0.35[.014]
17p-24p	±0.40[.016]

mat'l. code				surface ASME Y14.5	tolerance ASME Y14.5	projection
ltr	ecn no	dr	date	tolerances unless otherwise specified		
K				angles	linear X.±0.5[.020]	MM [INCH]
					X.X±0.3[.012]	
				X°±1°	X.XX±0.1[.004]	scale
				dr	BEER FU	062509
				engr	BEER FU	062509
				chr	GARY HSIEH	062509
				appd	JOSEPH HSIA	062509
sheet index	revision sheet					

product family: TERMINAL BLOCK

title: TERMINAL BLOCK PLUGABLE, SOCKET, SIGNAL, R/A

dwg no: 20020110 — sheet 4 of 5 — size: A4

type: CUSTOMER Drawing

Copyright FCI.

FCIconnect.com

PRODUCT NUMBER	SERIES NAME	PITCH
20020110-HXXXXXXLF	06-508	5.08 mm

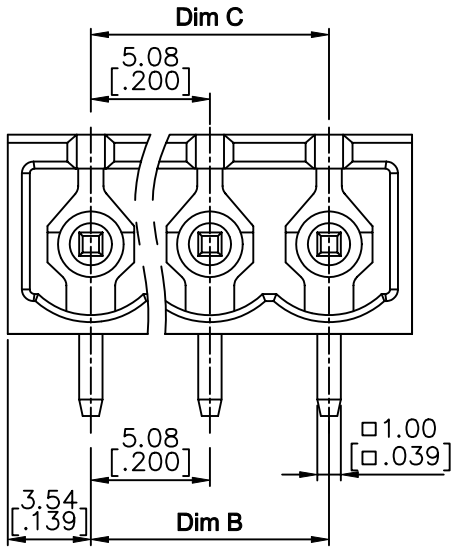

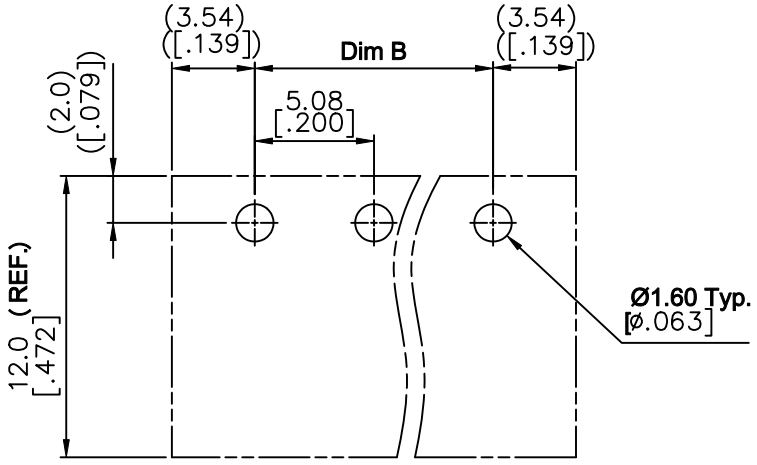

RECOMMENDED P.C.B LAYOUT

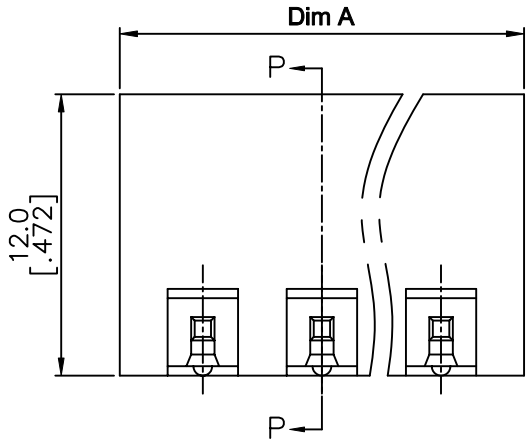

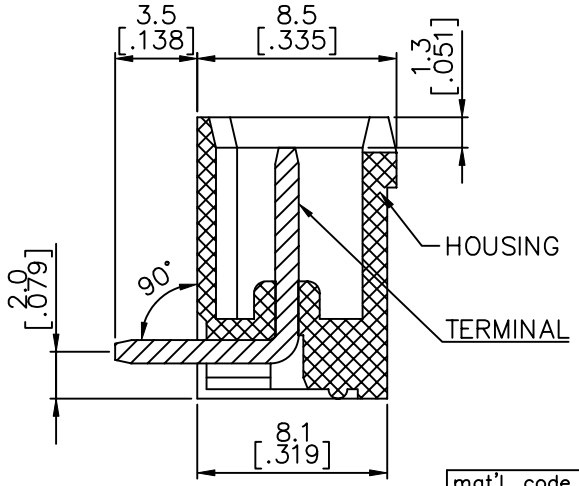

SECTION P-P

N = NUMBER OF POLES
DIMENSION

Dim A	N*5.08[.200]+2.0[.193]
Dim B	(N-1)*5.08[.200]
Dim C	(N-1)*5.08[.200]

Poles	Tolerance
2p-6p	±0.15[.006]
7p-12p	±0.25[.010]
13p-16p	±0.35[.014]
17p-24p	±0.40[.016]

mat'l. code		surface ASME Y14.5	tolerance ASME Y14.5
ltr	ecn no dr date	tolerances unless otherwise specified	
K		angles	linear X.±0.5[.020]
		X°±1°	X.X±0.3[.012]
			X.XX±0.1[.004]
dr	BEER FU	062509	
engr	BEER FU	062509	
chr	GARY HSIEH	062509	
appd	JOSEPH HSIA	062509	

projection | MM [INCH] | scale

product family: TERMINAL BLOCK

title: TERMINAL BLOCK
PLUGABLE, SOCKET, SIGNAL, R/A

dwg no 20020110 | sheet 5 of 5 | size A4

type: CUSTOMER Drawing

sheet index | revision sheet