Chipsmall Limited consists of a professional team with an average of over 10 year of expertise in the distribution of electronic components. Based in Hongkong, we have already established firm and mutual-benefit business relationships with customers from,Europe,America and south Asia,supplying obsolete and hard-to-find components to meet their specific needs.

With the principle of “Quality Parts,Customers Priority,Honest Operation,and Considerate Service”,our business mainly focus on the distribution of electronic components. Line cards we deal with include Microchip,ALPS,ROHM,Xilinx,Pulse,ON,Everlight and Freescale. Main products comprise IC,Modules,Potentiometer,IC Socket,Relay,Connector.Our parts cover such applications as commercial,industrial, and automotives areas.

We are looking forward to setting up business relationship with you and hope to provide you with the best service and solution. Let us make a better world for our industry!

Contact us

Tel: +86-755-8981 8866 Fax: +86-755-8427 6832
Email & Skype: info@chipsmall.com Web: www.chipsmall.com
Address: A1208, Overseas Decoration Building, #122 Zhenhua RD., Futian, Shenzhen, China

THIS COPY IS PROVIDED ON A RESTRICTED BASIS AND IS NOT TO BE USED IN ANY WAY DETRIMENTAL TO THE INTERESTS OF PANDUIT CORP.

PANDUIT PART NUMBER	STUD SIZE	DIMENSIONS in.				
		A ±.020	W ±.010	C ±.015	M ±.020	H ±.005
P14-6FF	#6	.65 (16.51)	.28 (7.11)	.22 (5.59)	.49 (12.45)	.160 (4.06)
P14-8FF	#8	.72 (18.29)	.31 (7.87)	.25 (6.35)	.53 (13.46)	.173 (4.39)

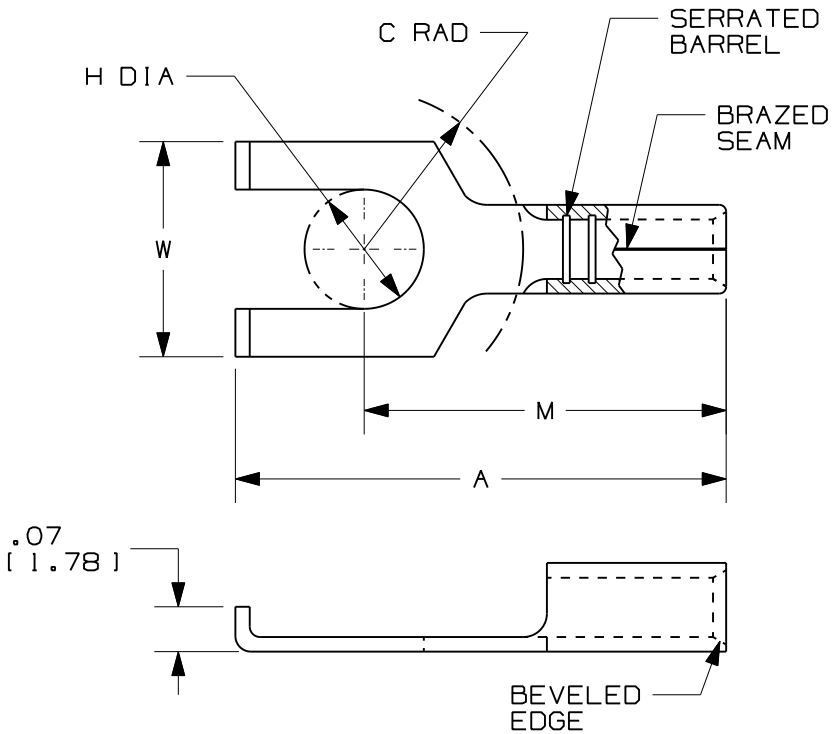

NOTES:

1. UL LISTED AND CSA CERTIFIED FOR:
   A. #16-14 AWG SOLID OR SRANDED COPPER WIRE
   B. 347° F (175° c) MAX. TEMP. RATING
2. MATERIAL:
   A. STAMPING - .03" (.76) THK COPPER, TIN PLATED
3. PACKAGE QTY: STD. PKG. 100
   BULK PKG. 1000
4. DIMENSIONS IN BRACKETS ARE IN MILLIMETERS
5. INSTALLATION TOOLS: CT-100, CT-160, CT-200
6. WIRE STRIP LENGTH: 9/32" (7.1)

LISTED 587H E52164

CERTIFIED LR31212

REV	DATE	BY	CHK	APR	DESCRIPTION	ECN
6	05.11.12	BDK	LSM	LSM	ADDED NOTE 6	A41237
5	11/01	SAB			THE TOLERERANCE FOR DIMENSION H WAS +/-.01	
4	10/01	SAB	SKB	LA	DIMENSION H FOR P14-6FF WAS .15, (3.81)	09712
3	1/10	RM	SKB	JAC	FILESPEC WAS A41237A::1:L1	08937
2	7-88	DW			REDRAWN WITH REVISIONS	

TITLE

#16-14 BARREL NON-INSULATED FLANGED FORK

CUSTOMER DRAWING

ITEM REVISION NAME: N41237BA/05

DATASET FILE NAME: N41237BA_DC_P14-FF/05A

UNLESS OTHERWISE SPECIFIED, DIMENSIONAL TOLERANCES ARE: IN [mm]

.X ± .XXX ±
.XX ± ANGLES ±

THIRD ANGLE PROJECTION

MATERIAL: SEE NOTES

DRAWING NUMBER: A41237

DRAWN BY	DATE	CHK	SCALE		SIZE
DAW			N.T.S.	SHT 1 OF 1	A

D10100DA/12