Chipsmall Limited consists of a professional team with an average of over 10 year of expertise in the distribution of electronic components. Based in Hongkong, we have already established firm and mutual-benefit business relationships with customers from,Europe,America and south Asia,supplying obsolete and hard-to-find components to meet their specific needs.

With the principle of “Quality Parts,Customers Priority,Honest Operation,and Considerate Service”,our business mainly focus on the distribution of electronic components. Line cards we deal with include Microchip,ALPS,ROHM,Xilinx,Pulse,ON,Everlight and Freescale. Main products comprise IC,Modules,Potentiometer,IC Socket,Relay,Connector.Our parts cover such applications as commercial,industrial, and automotives areas.

We are looking forward to setting up business relationship with you and hope to provide you with the best service and solution. Let us make a better world for our industry!

Contact us

Tel: +86-755-8981 8866 Fax: +86-755-8427 6832
Email & Skype: info@chipsmall.com Web: www.chipsmall.com
Address: A1208, Overseas Decoration Building, #122 Zhenhua RD., Futian, Shenzhen, China

REVISIONS					
REV	ECO	DESCRIPTION	DATE	BY	APPR
A1	-	TECHNICAL DATA SHEET RELEASE	12-MAY-14	KMM	RFC

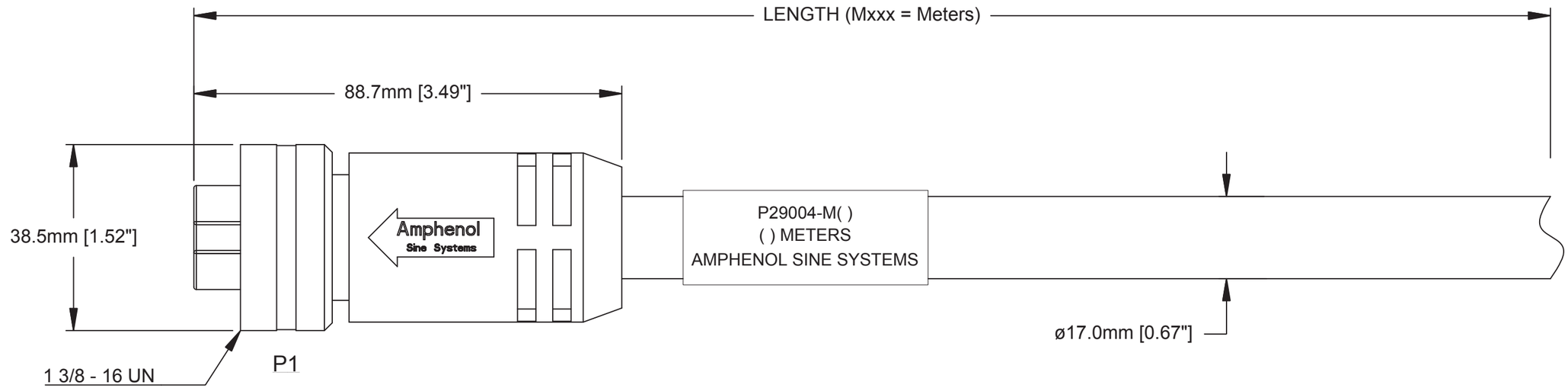

TECHNICAL DATA:

1) MATERIALS:
   - COUPLING NUT: MACHINED ALUMINUM, ANODIZED
   - INSULATION INSERT: THERMOPLASTIC, UL 94/V-0
   - CONTACT: GOLD FLASH PLATING OVER COPPER ALLOY
   - OVERMOLD MATERIAL: THERMOPLASTIC COLOR: BLACK
   - CABLE RATING: UL LISTED DUAL RATED TC-ER/STOOW, CSA TYPE STOOW, FT4 FLAME RATING, 600V, 90°C DRY & 75°C WET (TC-ER), 105°C (STOOW)
   - CABLE JACKET MATERIAL: PVC COLOR: BLACK
   - CONDUCTOR INSULATION: PVC
   - NUMBER OF CONDUCTORS: (3) 10AWG

2) ELECTRICAL DATA:
   - CURRENT (MAX): 30A
   - VOLTAGE (MAX): 600V AC/DC
   - INSULATION RESISTANCE (MIN): 5000M OHMS
   - DIELECTRIC TEST VOLTAGE: 2200V
   - SHORT CIRCUIT AMPERAGE RATING: 65kA - BREAKERS AND FUSES

3) MECHANICAL DATA:
   - TEMPERATURE RANGE: -40°C TO 90°C
   - PROTECTION: IP67 (MATED CONDITION)
   - MATING CYCLES: >500
   - VIBRATION RESISTANCE PER MIL-STD-202 METHOD 204
   - THERMAL SHOCK PER MIL-STD-202 METHOD 207
   - 48 HOUR SALT SPRAY PER MIL-STD-202 METHOD 101

4) RoHS COMPLIANT

5) UL 2237 LISTED ASSEMBLY
   UL FILE NUMBERS: E339703

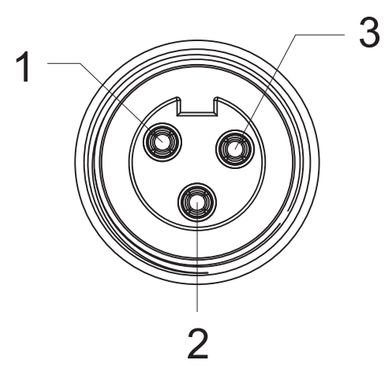

P1 WIRING DIAGRAM

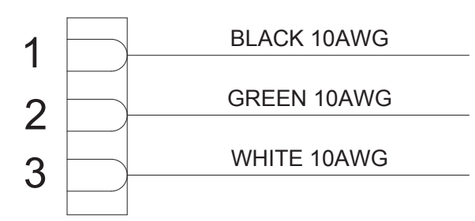

Risk of Electrical Shock
Do Not Disconnect Under Load.
Risque de chocs electriques
Ne pas debrancher sous tension.
⚠WARNING

TOLERANCE	
0-2.99 M = +100.0/-25.0mm	0-9.99 FT = +4" / -1"
3-8.99 M = +150.0/-25.0mm	10.00-29.99 FT = +6" / -1"
9-14.99 M = +300.0/-25.0mm	30.00-49.99 FT = +12" / -1"
15-OVER M = +450.0/-25.0mm	50 FT-OVER = +18" / -1"

QUANTITY	PART NUMBER	DESCRIPTION	ITEM

MATERIALS LIST

UNLESS OTHERWISE SPECIFIED
1) All dimensions are in metric(mm).
2) Tolerances are as follows:
1 PL DEC ±0.30 | Fractions ±1/64
2 PL DEC ±0.15 | Angles ±1°
3 PL DEC ±0.08
3) Note reference = X

MATERIAL SPECIFICATIONS:

PROCESS SPECIFICATIONS:

NEXT ASS'Y:

SIGNATURES		DATE
DRAWN:	KMM	12-MAY-14
CHECKED:	MRF	12-MAY-14
ENGINEER:	KMM	
APPROVAL:	RFC	12-MAY-14
CUSTOMER:		

THIS DRAWING IS SUPPLIED FOR INFORMATION ONLY. DESIGN FEATURES, SPECIFICATIONS AND PERFORMANCE DATA SHOWN HEREON ARE THE PROPERTY OF THE AMPHENOL CORPORATION. NO RIGHTS OF REPRODUCTION ARE IMPLIED. ALL DIMENSIONS ARE SUBJECT TO NORMAL MANUFACTURING VARIATIONS.

Amphenol
Sine Systems - www.amphenol-sine.com
44724 Morley Drive
Clinton Township, MI 48036

M35 POWERBOSS LITE, 3 PIN, FEMALE-STR, 10 AWG, TC-ER/STOOW, PVC JACKET

SIZE	TYPE	DWG NO:	REVISION
	C-	P29004-Mxxx	A1
SCALE: FULL		C-P29004	SHEET 1 OF 1

TITLE: M35 PB LITE, 3 PIN, F-STR, 10AWG, TC-ER/STOOW, PVC
DWG NO: C-P29004-Mxxx
REV: A1
SH: 1
OF: 1