Chipsmall Limited consists of a professional team with an average of over 10 year of expertise in the distribution of electronic components. Based in Hongkong, we have already established firm and mutual-benefit business relationships with customers from,Europe,America and south Asia,supplying obsolete and hard-to-find components to meet their specific needs.

With the principle of “Quality Parts,Customers Priority,Honest Operation,and Considerate Service”,our business mainly focus on the distribution of electronic components. Line cards we deal with include Microchip,ALPS,ROHM,Xilinx,Pulse,ON,Everlight and Freescale. Main products comprise IC,Modules,Potentiometer,IC Socket,Relay,Connector.Our parts cover such applications as commercial,industrial, and automotives areas.

We are looking forward to setting up business relationship with you and hope to provide you with the best service and solution. Let us make a better world for our industry!

Contact us

Tel: +86-755-8981 8866 Fax: +86-755-8427 6832
Email & Skype: info@chipsmall.com Web: www.chipsmall.com
Address: A1208, Overseas Decoration Building, #122 Zhenhua RD., Futian, Shenzhen, China

NOTES:

1. ELECTRICAL SPECIFICATIONS:
   - CENTER FREQUENCY = 1615±5 MHz
   - BANDWIDTH AT −10 dB S11: 25 MHz
   - VSWR = SHALL BE 2:1 MAX ACROSS A MINIMUM 25 MHz BANDWIDTH
   - DIRECTIVITY IN AZIMUTH SHALL NOT VARY BY MORE THAN 3 dB FROM MAXIMUM WHEN MEASURED AT 25° ELEVATION
   - DIRECTIVITY IN ELEVATION SHALL NOT VARY MORE THAN 5 dB FROM ZENITH TO 25° ELEVATION
   - A/R SHALL BE 3 dB MAX AT ZENITH
   - GAIN SHALL BE 3 dBic MIN AT ZENITH
   - LEFT HAND CIRCULAR POLARIZATION
   - IMPEDANCE = 50 OHMS
2. SPECIFICATIONS ARE FOR UNPACKAGED ANTENNA.
3. FOOTPRINT AND ELECTRICAL SPECIFICATIONS ARE SUBJECT TO CHANGE. CONSULT SPECTRUM MICROWAVE FOR SPECIFIC APPLICATIONS.
4. TESTING TO BE PERFORMED ON AN ALUMINUM GROUND PLANE, 2.362 [60] X 2.362 [60] , IN FREE SPACE.

5. MEASUREMENT FOR PIN IS TAKEN FROM FACE OF ADHESIVE (.005 DIMENSION) WITH PAPER REMOVED.

6. DIMENSIONS IN BRACKETS IN MILLIMETERS.

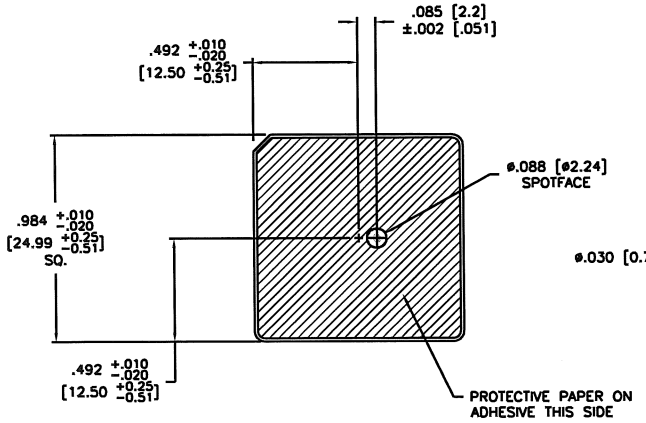

BOTTOM

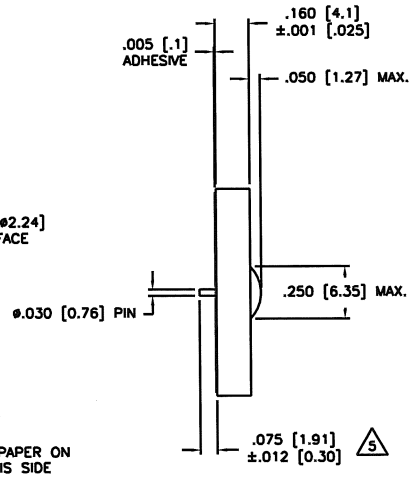

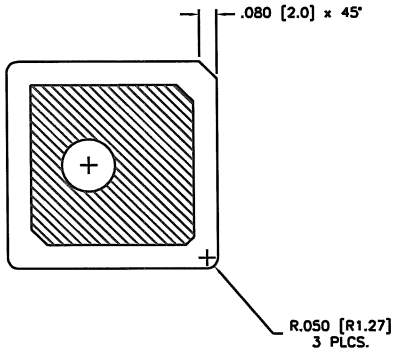

TOP

RoHS COMPLIANT

REV. NO.	00	UNLESS OTHERWISE SPECIFIED DIMENSIONS ARE IN INCHES. DO NOT SCALE.	TOLERANCES UNLESS OTHERWISE SPECIFIED Fractions ± 1/64	SPECTRUM CONTROL INC.	FAIRVIEW PENNSYLVANIA
CHANGE NOTICE	CN 56798-ENG	THIRD ANGLE	Dec. .xx± .01	Dwn. KAUFFMAN	Description
			Dec. .xxx± .005	DATE 11-23-10	PATCH ANTENNA ASSEMBLY
			Angles ±0° 30'	Engr. SCHREINER	PA251615025SALF
			CODE IDENT. NO. OLSP2	Sheet 1 of 1	

Quality Products From The Specialists In Electro-Magnetic Compatibility